400

Hydraulic Swing Gate Operator

FAAC International Inc.
Headquarter & East Coast Operations
3160 Murrell Road
Rockledge, FL 32955
Tel. 800 221 8278
www.faacusa.com

FAAC International Inc.
West Coast Operations
357 South Acacia Avenue
Fullerton, CA 92831

TABLE OF CONTENTS

Important Safety Information 3
Important Installation Information 3
General Safety Precautions 4
UL325 Gate Operator Classifications 5
Installing the Warning Signs 5

400 OPERATOR

1. DESCRIPTION TECHNICAL SPECIFICATIONS 6
1.1 Dimensions 6
1.2 Wiring 6
2. INSTALLATION 7
2.1. Preliminary Checks 7
2.2. Installation Dimensions 7
2.3 General Rules 7
2.4. Installing the Operator 7
2.5. By-Pass Valves adjustment 9
3. FINAL OPERATIONS 9
4. SYSTEM TEST 10
5. MANUAL OPERATION 10
5.1 Restoring Normal Operating Mode 10
6. OUTWARD OPENING 10
7. POSITIVE STOP ACCESSORY 11
8. MAINTENANCE AND REPAIRS 12
8.1 Oil Level Check 12

455D CONTROL BOARD

1. General Description 14
2. Technical Specifications 14
3. Features 14
4. Layout and Components 14
5. Electric Connections 15
6. Connection of Safety Devices 16
7. Operating Logics 18
8. Programming 18
9. Start-up 20
10. Learning Operating Times 21
11. Final Tests 21
12. Operating Modes Detailed Description 22
13. Prewired Enclosure 24

SPARE PARTS

400 CBAC 27
Cylinder 28
Distribution Flange 29
Locking Cap 30
Rear Flange 30

IMPORTANT SAFETY INFORMATION ⚠

WARNING - to reduce the risk of severe injury or death:

1. READ AND FOLLOW ALL INSTRUCTIONS.
2. Never let children operate or play with the gate controls. Keep remote controls away from children.
3. Always keep people and objects away from the gate. NO ONE SHOULD CROSS THE PATH OF A MOVING GATE.
4. Test the gate operator monthly. The gate MUST reverse on contact with a rigid object or stop when an object activates the non-contact sensors. After adjusting the force or the limit of travel, retest the gate operator. Failure to adjust and retest the gate operator properly can increase the risk of injury or death.
5. Use the emergency release only when the gate is not moving.
6. KEEP GATES PROPERLY MAINTAINED. Read the user's manual. Have a qualified service person make repairs to gate hardware.
7. The entrance is for vehicles only. Pedestrians must use a separate entrance.
8. SAVE THESE INSTRUCTIONS.

IMPORTANT INSTALLATION INFORMATION

a) Install the gate operator only when:

1) The operator is appropriate for the construction of the gate and usage Class of the gate,
2) All openings of a horizontal slide gate are guarded or screened from the bottom of the gate to a minimum of 1.83 m (6 ft) above the ground to prevent a 57.2 mm (2-1/4 in) diameter sphere from passing through openings anywhere in the gate, and in that portion of the adjacent fence that the gate covers in the open position,
3) All areas of the moving vertical pivot gate panel from the bottom of the gate to the top of the gate or a minimum of 1.83 m (72 in) above grade, whichever is less, that pass by a fixed stationary object, and in the area of the adjacent fence that the gate covers during the travel of the gate, shall be designed, guarded or screened to prevent a 57.2 mm (2-1/4 in) diameter sphere from passing through such areas.
4) All exposed pinch points are eliminated or guarded, and
5) Guarding is supplied for exposed rollers.
6) The operator instructions shall list the maximum number of open and close entrapment protection devices capable of being connected to the operator.

b) The operator is intended for installation only on gates used for vehicles. Pedestrians must be supplied with a separate access opening. The pedestrian access opening shall be designed to promote pedestrian usage. Locate the gate such that persons will not come in contact with the vehicular gate during the entire path of travel of the vehicular gate.

c) The gate must be installed in a location so that enough clearance is supplied between the gate and adjacent structures when opening and closing to reduce the risk of entrapment. Swinging gates shall not open into public access areas.

d) The gate must be properly installed and work freely in both directions prior to the installation of the gate operator. Do not over-tighten the operator clutch or pressure relief valve to compensate for an improperly installed, improperly functioning, or damaged gate.

e) For gate operators utilizing Type D protection:

1) The gate operator controls must be placed so that the user has full view of the gate area when the gate is moving,
2) An additional placard that is marked in letters at least 6.4-mm (1/4-in) high with the word "WARNING" and the following statement or the equivalent: "Moving Gate Has the Potential of Inflicting Injury or Death – Do Not Start Gate Unless Path is Clear." shall be placed adjacent to the controls,
3) An automatic closing device (such as a timer, loop sensor, or similar device) shall not be employed, and
4) No other activation device shall be connected.

f) Permanently mounted controls intended for user activation must be located at least 1.83 m (6 ft) away from any moving part of the gate and where the user is prevented from reaching over, under, around or through the gate to operate the controls.

Exception: Emergency access controls only accessible by authorized personnel (e.g.fire, police, EMS) may be placed at any location in the line-of-sight of the gate.

g) The Stop and/or Reset buttons must be located within line-of-sight of the gate. Activation of the reset control shall not cause the operator to start.

h) A minimum of two (2) WARNING SIGNS shall be installed, in the area of the gate. Each placard is to be visible by persons located on the side of the gate on which the placard is installed.

i) For gate operators that utilize a non-contact sensor (photo beam or similar):

1) See instructions on the placement of non-contact sensors for each type of application,
2) Care should be exercised to reduce the risk of nuisance tripping, such as when a vehicle trips the sensor while the gate is still moving, and
3) One or more non-contact sensors shall be located where the risk of entrapment or obstruction exists, such as the perimeter reachable by a moving gate or barrier.

j) For gate operators that utilize a contact sensor (edge sensor or similar):

1) One or more contact sensors shall be located where the risk of entrapment or obstruction exists, such as at the leading edge, trailing edge, and postmounted both inside and outside of a vehicular horizontal slide gate.
2) One or more contact sensors shall be located at the bottom edge of a vehicular vertical lift gate.
3) One or more contact sensors shall be located at the pinch point of a vehicular vertical pivot gate.
4) A hardwired contact sensor shall be located and its wiring arranged so that the communication between the sensor and the gate operator is not subjected to mechanical damage.
5) A wireless device such as one that transmits radio frequency (RF) signals to the gate operator for entrapment protection functions shall be located where the transmission of the signals are not obstructed or impeded by building structures, natural landscaping or similar obstruction. A wireless device shall function under the intended end-use conditions.
6) One or more contact sensors shall be located on the inside and outside leading edge of a swing gate. Additionally, if the bottom edge of a swing gate is greater than 152 mm (6 in) but less than 406 mm (16 in) above the ground at any point in its arc of travel, one or more contact sensors shall be located on the bottom edge.
7) One or more contact sensors shall be located at the bottom edge of a vertical barrier (arm).

GENERAL SAFETY PRECAUTIONS

Gate Construction

Vehicular gates should be constructed and installed in accordance with ASTM F2200: Standard Specification for Automated Vehicular Gate Construction.

For a copy of the standard, contact ASTM directly at 610-832-9585 or www.astm.org

Installation

- If you have any questions or concerns regarding the safety of the gate operating system, do not install the operator and consult the manufacturer.
- The condition of the gate structure itself directly affects the reliability and safety of the gate operator.
- Only qualified personnel should install this equipment. Failure to meet this requirement could cause severe injury and/or death.
- The installer must provide a main power switch that meets all applicable safety regulations.
- It is extremely unsafe to compensate for a damaged gate by increasing he operator's force.
- Install devices such as reversing edges and photo beams to provide better protection for personal property and pedestrians. Install reversing devices that are appropriate to the gate design and application.
- Before applying electrical power, ensure that voltage requirements of the equipment correspond to the supply voltage. Refer to the label on your gate operator system.

Usage

- Use this equipment only in the capacity for which it was designed. Any use other than that stated should be considered improper and therefore dangerous.
- The manufacturer cannot be held responsible for damage caused by improper, erroneous or unreasonable use.
- If a gate system component malfunctions, disconnect the main power before attempting to repair it.
- Do not impede the movement of the gate, you may injure yourself or damage the gate system as a result.
- This equipment may reach high thermal temperatures during normal operation, therefore use caution when touching the external housing of the gate operator.
- Use the manual release mechanism according to the procedures presented in this manual.
- Before performing any cleaning or maintenance operations, disconnect power to the equipment.
- All cleaning, maintenance or repair work must performed by qualified personnel.

UL325 Gate Operator Classifications

CLASS I - RESIDENTIAL VEHICULAR GATE OPERATOR

A vehicular gate operator (or system) intended for use in garages or parking areas associated with a residence of one to four single families.

CLASS II - COMMERCIAL / GENERAL ACCESS VEHICULAR GATE OPERATOR

A vehicular gate operator (or system) intended for use in commercial locations or buildings such as multi-family housing units (five or more single family units), hotel, garages, retail store, or other buildings accesible by or servicing the general public.

CLASS III - INDUSTRIAL / LIMITED ACCESS VEHICULAR GATE OPERATOR

A vehicular gate operator (or system) intended for use in an industrial location or building such as a factory or loading dock area or other locations not accessible by or intended to service the general public.

CLASS IV - RESTRICTED ACCESS VEHICULAR GATE OPERATOR

A vehicular gate operator (or system) intended for use in guarded industrial locations or buildings such as an airport security area or other restricted access locations not servicing the general public, in which unauthorized access is prevented via supervision by security personnel.

Installing the Warning Signs

This FAAC swing gate operator is supplied with two warning signs to alert people that a possible hazard exists and that appropriate actions should be taken to avoid the hazard or to reduce exposure to it.

Permanently install one warning sign on each side of the gate so they are fully visible to traffic and pedestrians.

Use appropriate hardware such as metal screws (not supplied) to permanently install each warning sign.

400 OPERATOR

1 DESCRIPTION AND TECHNICAL SPECIFICATIONS

The FAAC Model 400 Swing Gate Operator consists of an electric pump and a hydraulic piston which transmits drive to the gate leaf.

Models with hydraulic locking do not require the installation of electric locks, as they provide mechanical locking of the leaf when the motor is not operating. Models without hydraulic locking require the installation of electric locks to ensure that the leaf is mechanically locked.

The 400 Operators were designed and built to automate swing leaf gates. Do not use for any other purpose.

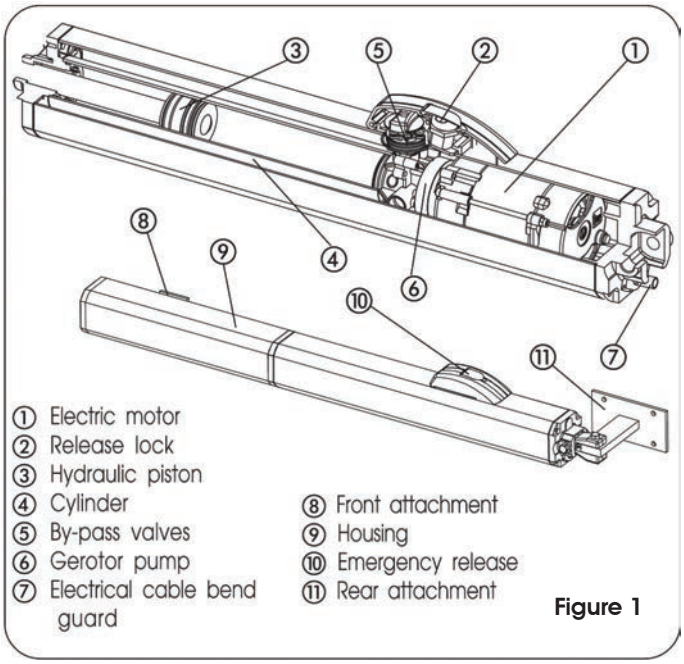

Figure 1

Table 1: 400 Operator – Technical Specifications

MODEL	CBC	CBAC	SB	SBS	CBAC R	CBAC EG	SB EG
Max Traction / Thrust Force: (daN)	620	620	620	775	465	465	465
Effective Rod Stroke: (inches)	10 ¼	10 ¼	10 ¼	10 ¼	10 ¼	15	15
Linear Rod Speed: (inches/sec)	0.4	0.4	0.4	0.3	0.6	0.6	0.6
Operator Weight: (lbs)	19	19	19	19	19	22	22
Use Frequency: (cycles/hour)	70	70	70	60	80	50	50
Pump Flow-Rate: (liters/min)	1	1	1	0.75	1.5	1.5	1.5
Hydraulic Locking: (1) = Closing (2) = Opening and Closing	(1)	(2)	/	/	(2)	(2)	/
Max Leaf Length: (feet)	16	16	18	20	12	18	20
Min Leaf Length: (feet)	6	6	6	7 ½	6	6	6
Power Supply	115 VAC ± 10% or 230 VAC +6% -10% 50/60 Hz.						
Absorbed Power	220 W						
Absorbed Current	1A (230V) or 2A (115V)						
Electric Motor	1400 rpm - 4 poles						
Thermal Protection on Windings	248 °F (120°C)						
Thrust Capacitor	25uF / 115 V or 8uF / 230 V						
Ambient Operating Temperature Range	-4°F +131°F (-20 °C +55°C)						
Protection Class	IP55						

1.1 DIMENSIONS

Figure 2

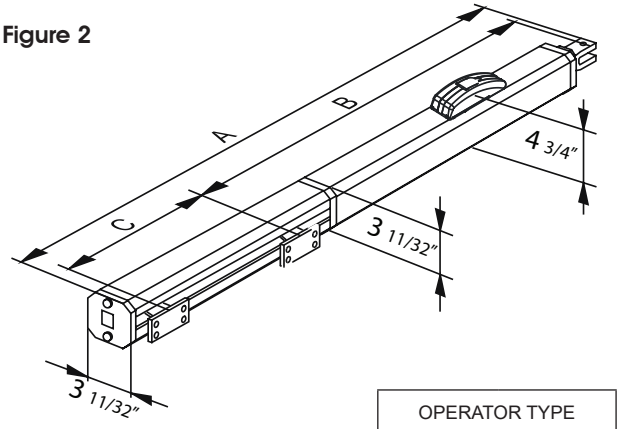

	OPERATOR TYPE	
	STANDARD	EG
A	40 ½ in	50 ½ in
B	27 ½ in	32 ¼ in
C	10 ¼ in	15 in

1.2 WIRING

Figure 3

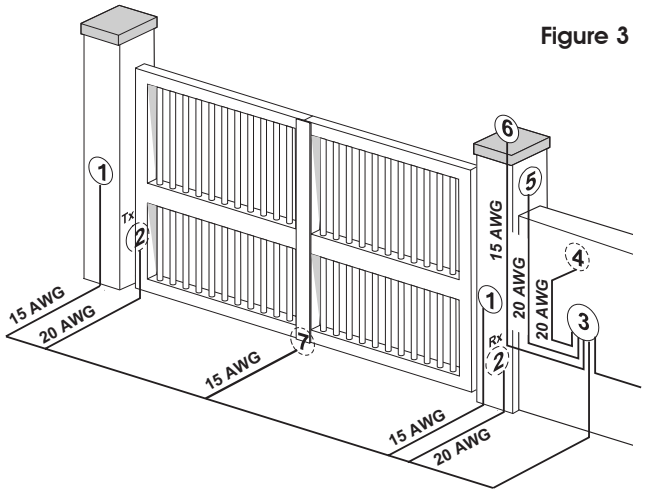

1. Operators Mod 400
2. Photocells
3. Electronic control unit
4. Key operated push-button
5. Radio receiver
6. Warning light
7. Electric lock (if necessary)

Always separate low voltage wiring from AC power cables. Use separate conduits to avoid electrical interference.
The installer is responsible for grounding the gate and operator systems, for providing the main power breaker switch, and for making sure that the entire gate system meets all applicable electrical codes.
Make sure to locate all controls that operate the gate system at least 6 ft away from any moving parts.

2 INSTALLATION

2.1 PRELIMINARY CHECKS

To ensure a correctly operating automated system, the structure of the gate must satisfy the following requirements:

- Leaf length should not exceed "Max Leaf Length" dimensions in Table 1.
- The gate should have a strong and rigid leaf structure.
- The gate leaves should have a smooth, uniform movement during the entire length of travel without any irregular friction.
- Existing hinges should be in good condition.
- Travel limit mechanical stops must be provided.
- The condition of the structure directly influences the reliability and safety of the automated system.
- The gate must swing level

2.2 INSTALLATION DIMENSIONS

Figure 4

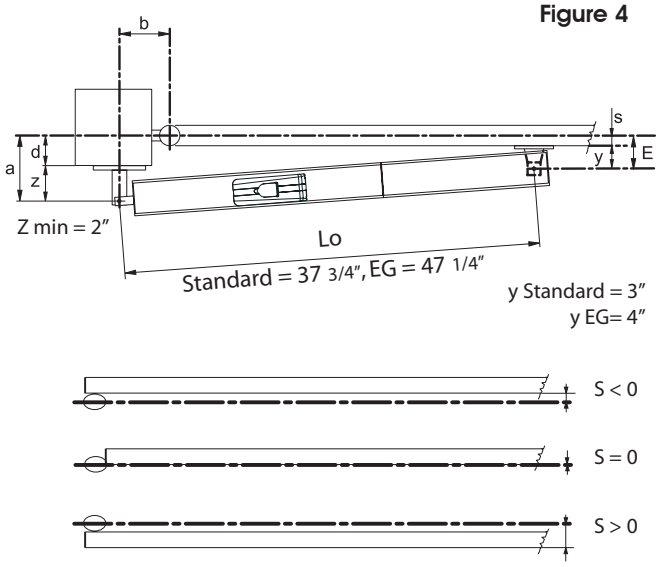

Table A: Recommended Dimensions for Standard Operators

Opening Angle	*a*	*b*	*c(*)*	*d(**)*	*s*
90°	5 1⁄16	5 1⁄16	10 1⁄4	3 1⁄8	¾
115°	4	4 ¾	10 1⁄4	2	¾
125°	3 ½	4 ¾	10 1⁄4	1 ½	0

Table B: Recommended Dimensions for EG Operators

Opening Angle	*a*	*b*	*c(*)*	*d(**)*	*s*
90°	7 7⁄8	6 1⁄4	15	5 7⁄8	¾
115°	6 ¾	6 1⁄4	15	4 3⁄8	¾
125°	5 1⁄8	6 ¾	15	3 1⁄8	¾

Dimensions in inches
(*) Rod effective stroke (**) maximum dimension

c = In order to prevent the rod from reaching its stop point internally when opening and closing, the effective rod stroke is shorter than the maximum stroke.

2.3 GENERAL RULES

If the dimensions indicated in table A or B cannot be achieved, the following must be considered in order to calculate different measurements:

- To obtain 90° opening of the leaf: **a** + **b** = **c**.
- To obtain over 90° opening of the leaf: **a** + **b** < **c**.
- Lower **a and b** dimensions will result in higher speeds.
- Limit the difference between **a and b** to within 1.5 inches. Higher differences will considerably vary gate opening and closing speed.
- The minimum **Z** dimension is 2 inches (Fig. 4);
- If the pillar dimensions or the position of the hinge (dimension **d**) do not make it possible to keep dimension **a** at the required size, a niche must be made in the pillar as shown in Fig. 5.
- Dimension **a** must always be larger than dimension **E**.

For installations that open outward, refer to Section 6.

Figure 5

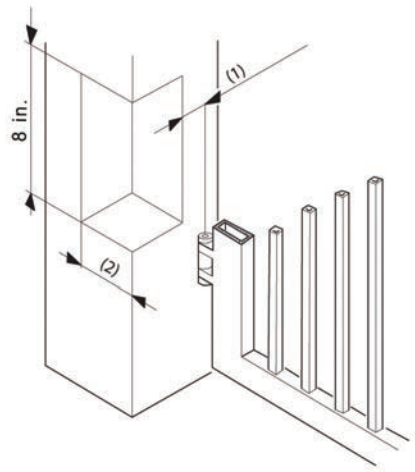

(1) Length of Dimension "a" - 2 in.
(2) Length of Dimension "b" + 4 in.

2.4 INSTALLING THE OPERATOR

Attention: To avoid compromising operator functionality, use measurements and dimensions indicated.

1.) Fasten the rear attachment to a pillar or column support. Follow the measurements indicated in Tables A / B. If necessary, modify the length of the supplied attachment.

- For iron pillars, weld the rear attachment (Fig. 6, Ref. 2) directly to the pillars.
- For masonry pillars, select one of the following solutions:

A.) Install an appropriate wall plate and then accurately weld the rear attachment.

OR

B.) Use screws and expansion plugs to secure the rear attachment plate (Fig. 6, Ref. a) to the pillar. Then weld the rear attachment to the plate as shown in Figure 6.

2.) Secure the operator to the rear attachment with the supplied screws (Fig. 6).

3.) Screw, halfway down, the front attachment onto the rod (Fig. 8, Ref.1). Tighten with the supplied nut.

4.) Release the operator (*see Section 5*).

5.) Fully extend the rod out to its stopping point, then push it back approximately 1/4 inch (Fig. 7).

Figure 6

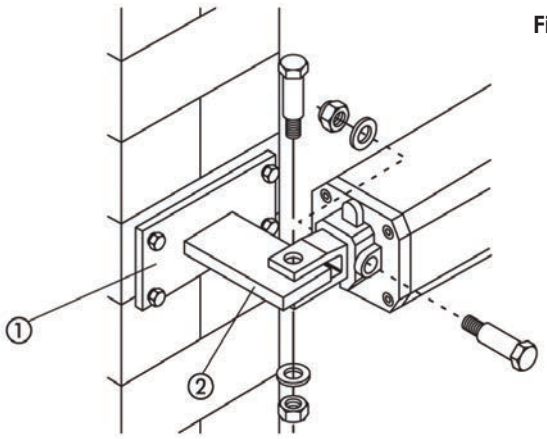

Figure 7

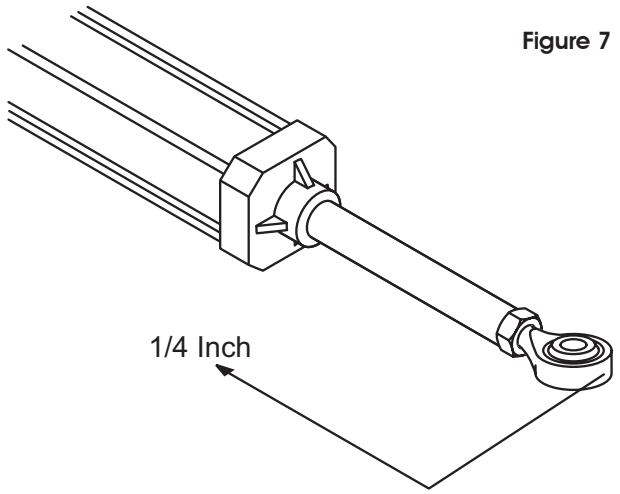

6.) Relock the operator (*see Section 5.1*).

7.) Fit the front bracket onto the rod (Fig. 8, Ref. 2)

8.) Close the gate leaf and, while keeping the operator perfectly horizontal, identify and mark the location of the front bracket on the leaf (Fig. 9).

9.) Temporarily fasten the front bracket to the leaf with two weld spots (protect rod from welding slag).

If the gate structure does not permit the bracket to be firmly fastened, modify the structure to create a solid support base.

10.) Release the operator and manually check that the gate can freely and completely open. Ensure that it stops via the travel limit mechanical stops and that leaf movement is good and frictionless.

11.) Temporarily release the operator from the bracket and then permanently weld the bracket to the leaf. ***Prevent welding slag from damaging the rod.*** (Fig.10). If welding is not feasible, secure the front and rear attachment plates with screws.

Figure 8

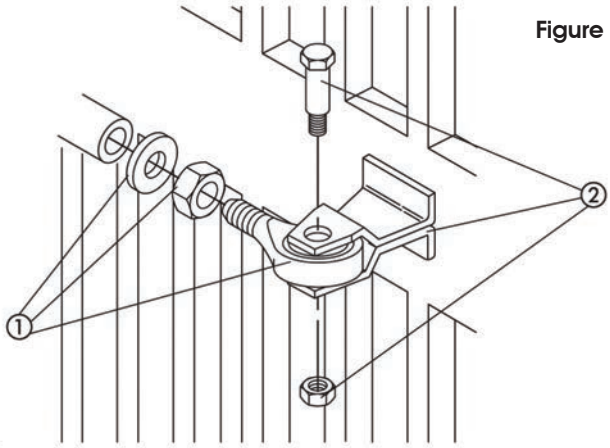

12.) Grease all securing pins of the attachments.

13.) Prepare the protective housing and fit it on the operator as shown in Fig. 11. Fit the electric cable strain relief (Fig. 12, Ref. 3).

14.) Re-lock the operator and make electrical connections to the electronic control unit following the instructions in the 455D section.

Figure 9

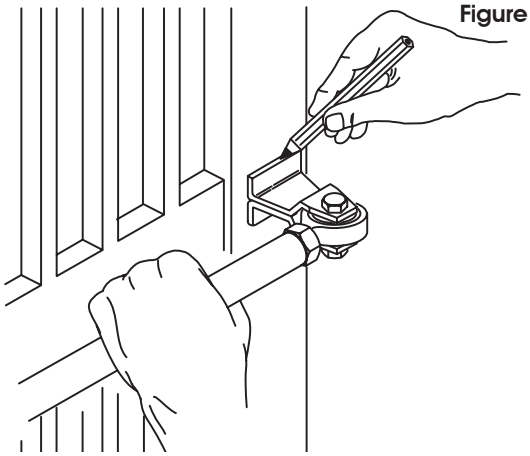

Figure 10

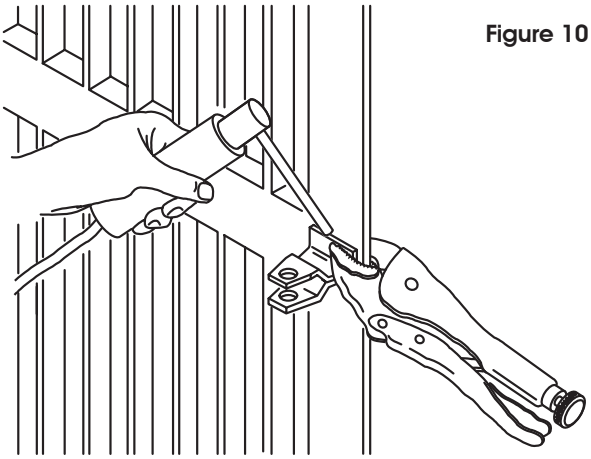

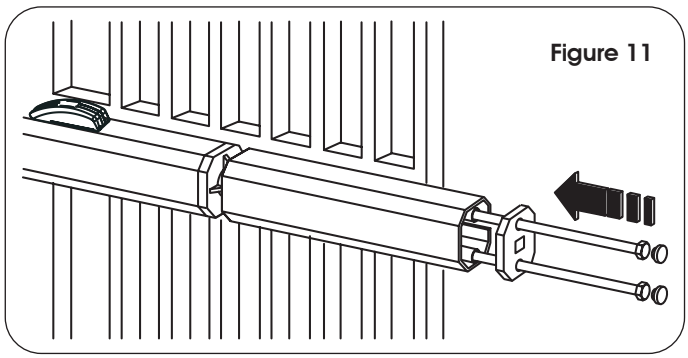

Figure 11

15.) Connect the power cable to the operator and fasten the screws (Figure 14A).

2.5 BY-PASS VALVES ADJUSTMENT

The Model 400 has an anti-crushing safety device which limits the operator's force when an obstacle is encountered while the gate is moving. Follow these steps to adjust the intervention threshold of the anti-crushing system:

- Lift the protective cap (Fig. 13, Ref.1) and insert the supplied key (Fig. 13, Ref. 2).
- Turn the key 90°clockwise to open the cover.
- Lift the cover (Fig. 14).
- Remove the screw (Fig. 14, Ref. 3) which secures the knob and then remove the knob (Fig. 14, Ref. 4).
- Locate the force adjustment screws (By-Pass) on the operator (Fig. 14, Ref. 5 and 6) .
  - OPEN pressure screw (green wording): gate opening direction.
  - CLOSE pressure screw (red wording): gate closing direction.
- To reduce torque, turn screws counter-clockwise.
- To increase torque, turn screws clockwise.
- Test the bypass adjustment by physically obstructing the gate during its travel and make corrections as appropriate
- When you have finished making adjustments, re-position the knob (Fig. 14, Ref. 4) and tighten the screw (Fig. 14, Ref. 3).
- Close the cover and lock it by turning the key counter-clockwise.

WARNING: Do not overtighten the screws to compensate for a damaged gate.

3 FINAL OPERATIONS

Finish the installation procedure as follows:

- Close the cover of the release device with the key.
- Remove the vent screw (Fig.12, Ref. 2).

WARNING: Failure to remove the vent screw may result in erratic operation.

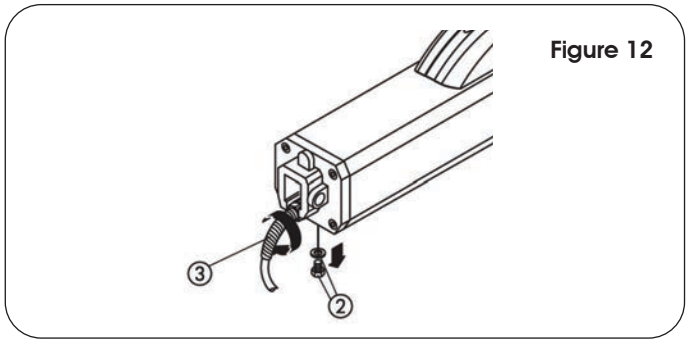

Figure 12

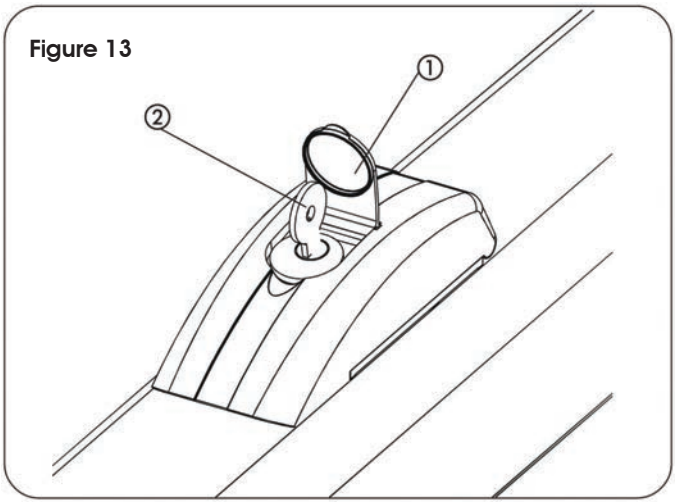

Figure 13

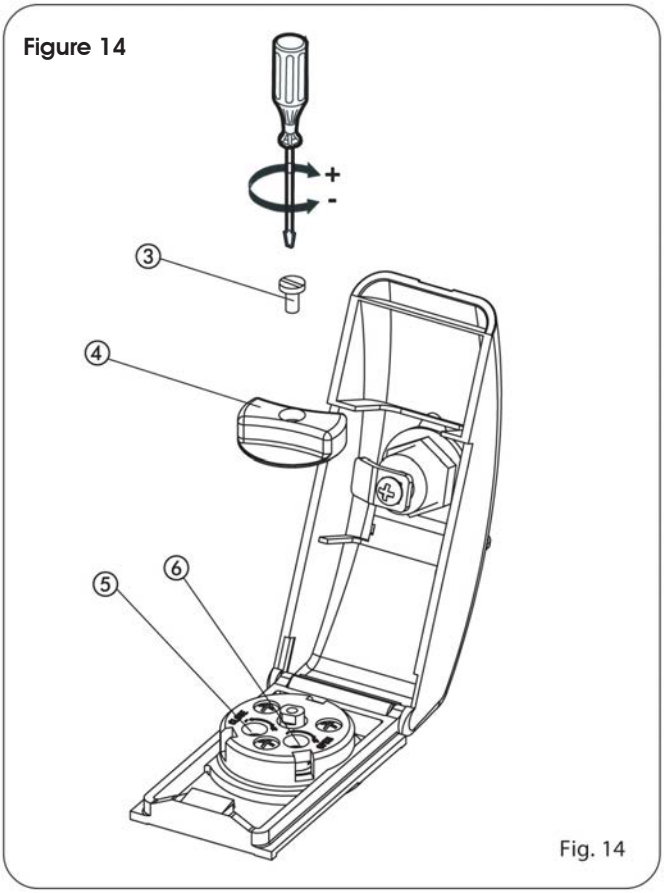

Figure 14

Fig. 14

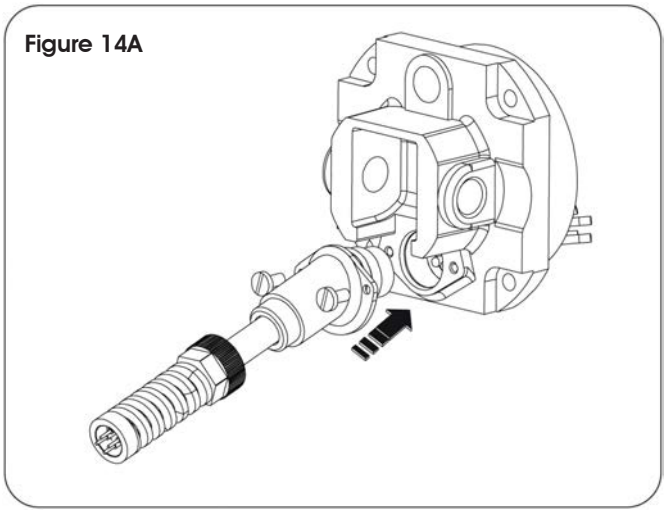

Figure 14A

4 SYSTEM TEST

When you have finished installing the unit, run a functional check of the automated system and all accessories connected to it, especially safety devices.

5 MANUAL OPERATION

If the gate has to be moved manually due to a power failure or a fault in the system, use the release device as described below.

- Lift the protective plug (Fig. 16, Ref. 1) and insert the supplied key (Fig. 16, Ref. 2).
- Turn the key 90°clockwise to open the cover.
- Lift the cover (Fig. 16, Ref.3).
- Turn the release knob counter-clockwise approximately two complete turns (Fig. 16, Ref. 4).

You can now open or close the leaf manually.

5.1 RESTORING NORMAL OPERATING MODE

To prevent an involuntary pulse from activating the operator during manual operation, cut power to the system before re-locking the operator.

- To re-lock the operator, turn the release knob clockwise until it stops (Fig. 16, Ref. 4).
- Do not force the red knob as it's designed to strip out before damaging the operator.
- Close the cover and turn the key 90° counter-clockwise (Fig. 16, Ref. 2).
- Finally, remove the key and close the protective plug (Fig. 16, Ref. 1).

Figure 16

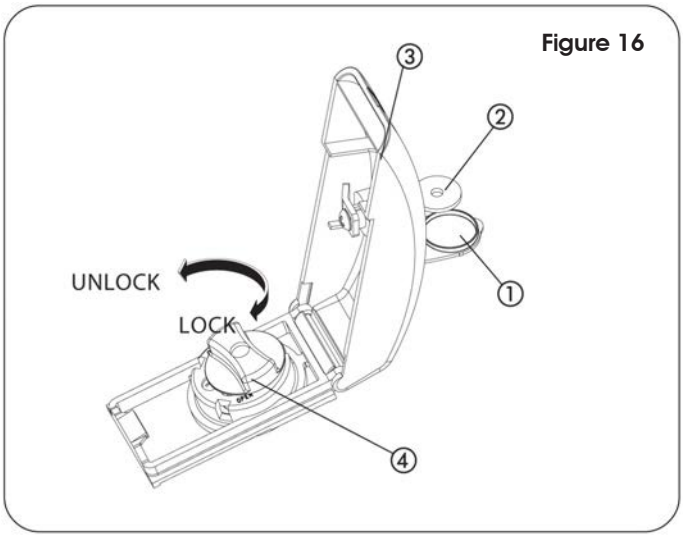

6 OUTWARD OPENING

Refer to Table C for this particular application. Select the operator according to leaf length as detailed in Table 1. Installation dimensions are provided in Table C.

To adjust the anti-crushing system for outward opening gates only, perform the following steps (note that these steps differ somewhat from instructions provided in Section 4.1):

- OPEN screw (green wording): gate closing direction.
- CLOSE screw (red wording): gate opening direction.
- To reduce torque, turn screws counter-clockwise.
- To increase torque, turn screws clockwise.

Figure 17

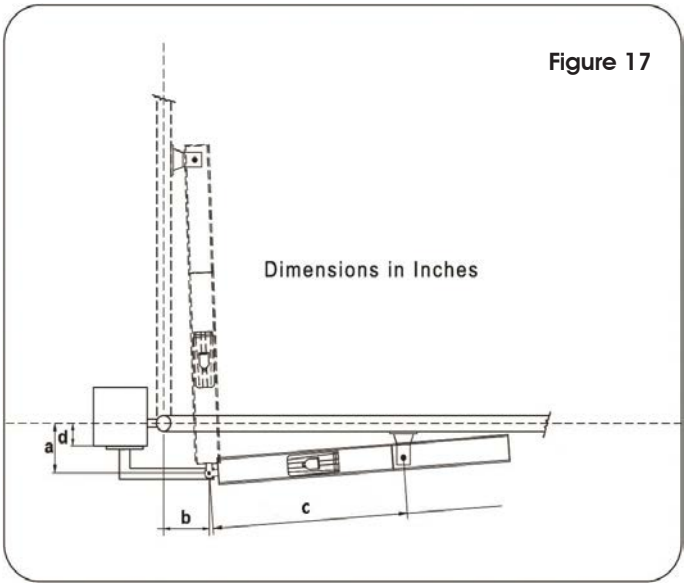

Table C: Standard Operators Recommended Dimensions

Opening Angle	a (inches)	b (inches)	d(**) (inches)	c (inches)
90°	5 1⁄16	5 1⁄16	n/a	28
115°	4	4 3⁄4	n/a	28

Table D: EG Operators Recommended Dimensions

Opening Angle	a (inches)	b (inches)	d(**) (inches)	c (inches)
90°	7 7⁄8	7 1⁄2	n/a	32 3⁄4
115°	5 3⁄4	7	n/a	32 3⁄4

(**) The dimension is not a constraint

7 POSITIVE STOP ACCESSORY

In case the gate doesn't have built in mechanical stops, it is possible to install, directly on the operator, an accessory to limit the rod's travel in both directions.

(P/N: 490109 STANDARD, 490043 EG)

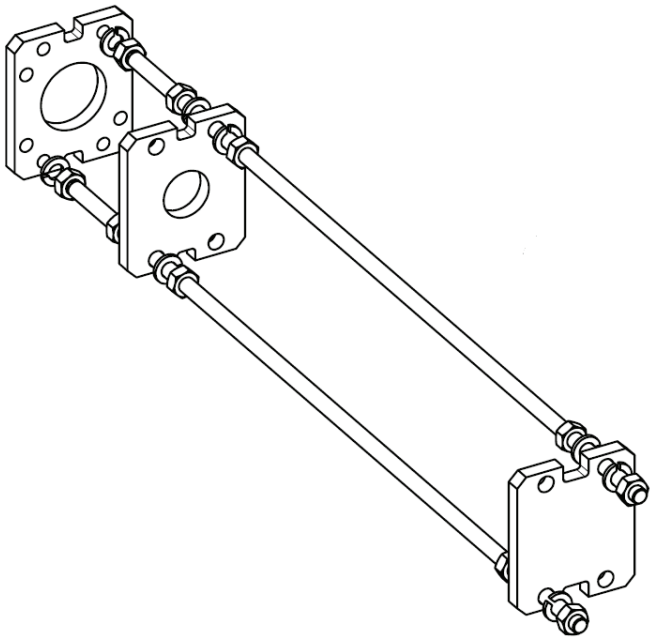

The accessory is mounted on the front flange of the operator using the supplied bolts.

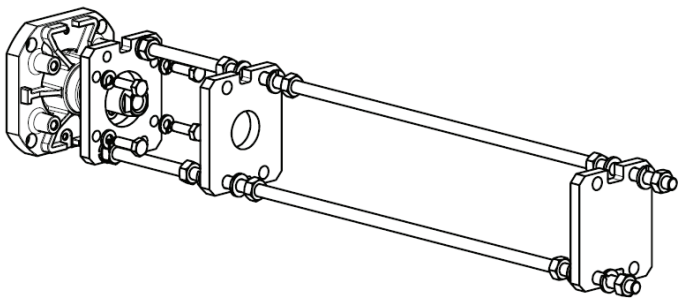

NOTE: The positive stops has 4 rods, 2 are shown for illustration purpose only.

For additional details please refer to the instructions included with the positive stop accessory.

With the use of the proper square shaped swivel joint (supplied):

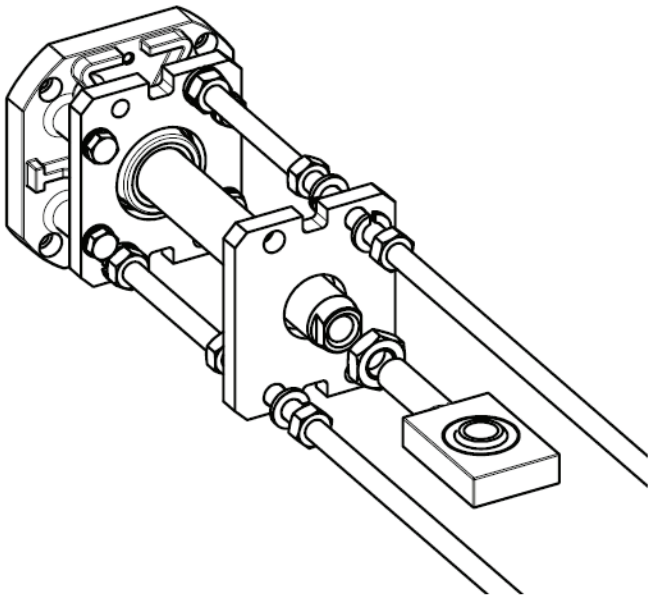

It's possible to limit the rod's travel and create two solid mechanical stop positions.

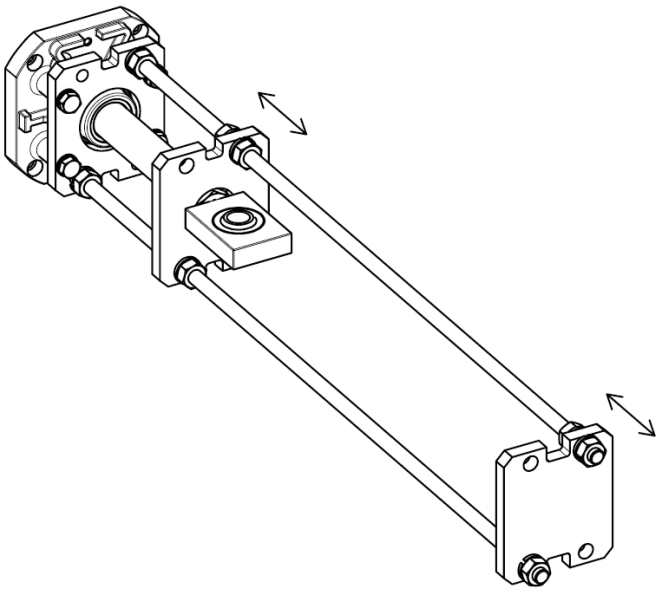

8 MAINTENANCE AND REPAIRS

Periodically check for correct adjustment of the anti-crushing safety device and the effectiveness of the release system to allow manual operation.
Safety devices installed on the system must be checked every 6 months.

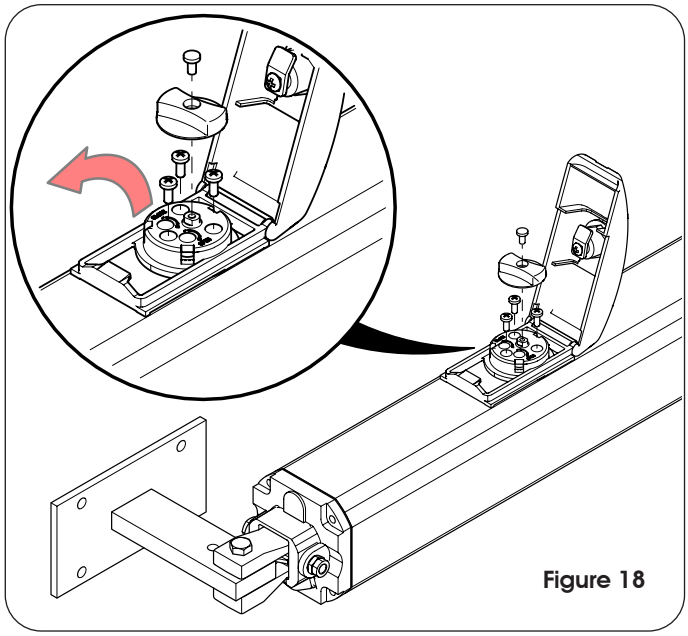

Figure 18

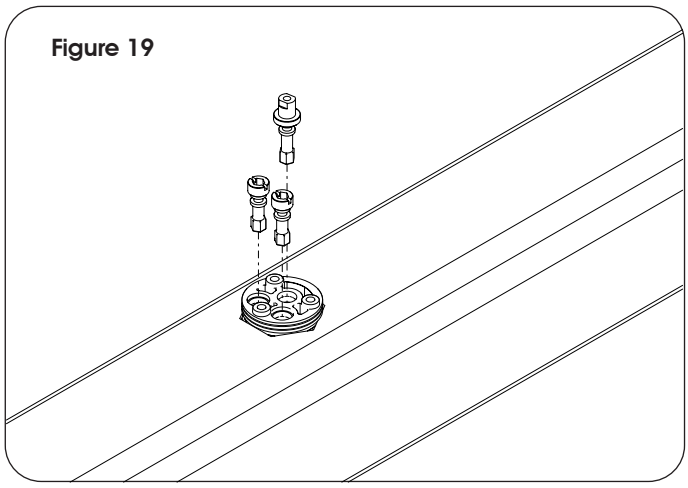

Figure 19

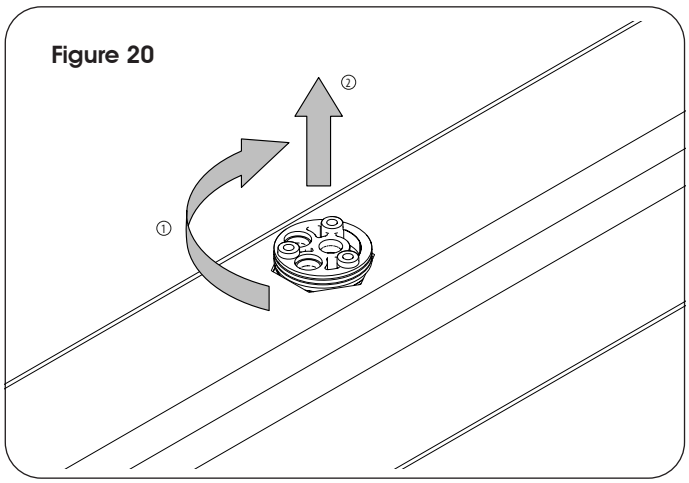

Figure 20

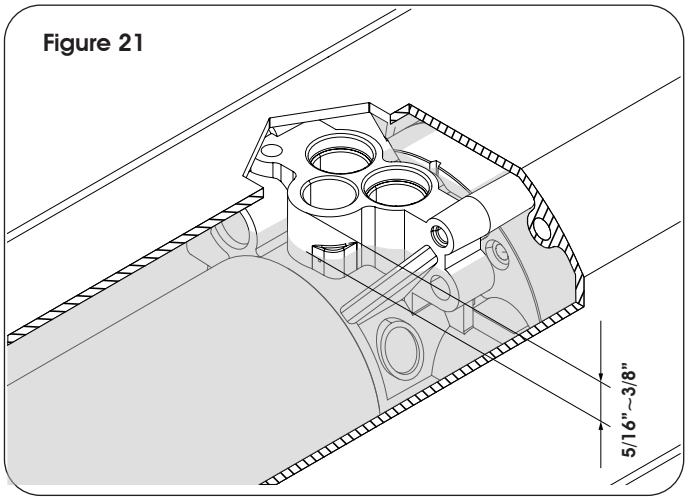

Figure 21

8.1 OIL LEVEL CHECK

Make sure the operator is perfectly level, powered off and that the piston is fully retracted (gate in the open position).

- Unlock the manual release cover and hinge it open
- Remove the red knob after removing the screw (Figure 18)
- The remove the 3 T20 security screws that are below the red knob (Figure 18)
- Grab the manual release from both ends and gently rock it while pulling up.
- Make sure to remove the o-ring that fits between the manual release and the body of the operator
- Set the parts on a clean towel/location
- Next remove the 3 extensions grabbing them with plyers and pulling straight up (Figure 19)
- Now rotate the collar (silver in color) clockwise by hand and then lift straight up (Figure 20). It's very important to not use tools or pry on this piece
- Now look into the body of the machine and to the left, the fluid should be up to the center of the tie rod (top for 400 standard or center for 400 EG when the piston is fully retracted)
- The fluid should be 5/16" to 3/8" from the top of the valve body as shown in Figure 21
- If the unit is low pour fluid in here until it reaches the target level. If you overfill the unit it will come out the breather hole in the rear flange.
- **USE ONLY FAAC HP OIL** ⚠
- Re-assembly the parts in reverse order making sure the o-rings and surfaces are clear of debri

REPAIRS

For repairs, contact FAAC's authorized repair centers.

This page is intentionally left blank

455D CONTROL BOARD

1. General Description

The 455 D control board is used to operate the FAAC High Voltage swing gate operators. It has several operating logics built in, programmable with the help of a display and push-buttons. The board allows connection of various accessories including monitored photocell for compliance with the UL325 standard Ed: 7.

The 455D control board allows the connection of 1 close and up to 2 open entrapment protection devices.

The board should be installed in an enclosure that is conveniently located as close as possible to the gate operator. All electrical connections from the control board to the operator must be made in a weatherproof junction box.

2. Technical Specifications

Input Voltage	115 V~ ± 10% or 230 V~ +6% -10% 50/60 Hz
Input Power	10 W
Motor Max. Load	800 W
Accessories Max. Load	0,5 A
Electric Lock Max. Load	15 VA
Ambient Operating Temperature Range	-4°F to +131°F
Protection Fuses	5A (230V version) 10A (115V Version) 800 mA (accessory)

3. Features

Function Logics:

Semi-automatic / Automatic / Safety Devices / "Stepped" Semi-automatic / "Stepped" Automatic / "Stepped" Safety Devices / Semi-automatic B / Dead-man C

Opening/Closing Time:

Programmable (from 0 to 120 s)

Pause Time:

Programmable (from 0 to 4 min.)

Closing Leaf Delay:

Programmable (from 0 to 4 min.)

Opening Leaf Delay:

2 s (can be excluded)

Thrust Force:

Adjustable on 50 levels for each motor

Terminal Board Inputs:

Open / Open Free Leaf / Stop / Limit-switch / Opening Safety Devices / Closing Safety Devices / Power Supply + Earth.

Terminal Board Outputs:

Flashing Lamp / Motors / 24 VDC Accessories Power Supply / 24 VDC Indicator-Light / Fail Safe / 12 VAC Electric Lock Power Supply

Programmable Functions:

Logic / Pause Time / Thrust Force / Torque at Initial Thrust / Opening and Closing Leaf Delay / Reversing Stroke / Over-Pushing Stroke / Indicator-Light / Pre-Flashing / Electric Lock / Fail Safe / Safety Devices Logic / Assistance Request / Detection Time of Obstacle or Contact Point

Learning Function:

Simple or complete work time learning, with or without Limit-switches

4. Layout and Components

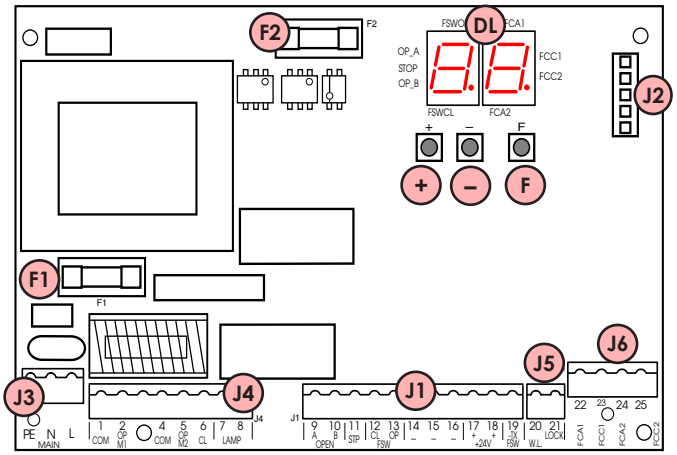

DL STATUS AND PROGRAMMING DISPLAY

J1 LOW VOLTAGE TERMINAL BLOCK

J2 CONNECTOR FOR RADIO RECEIVER

J3 AC POWER SUPPLY TERMINAL BLOCK

J4 MOTORS AND WARNING LAMP TERMINAL BLOCK

J5 INDICATOR-LIGHT AND ELECTRIC LOCK TERMINAL BLOCK

J6 LIMIT-SWITCH TERMINAL BLOCK

F1 MOTORS AND TRANSFORMER PRIMARY WINDING FUSE (F 5A - 230V) (F 10A - 115V)

F2 LOW VOLTAGE AND ACCESSORIES FUSE (T 800mA)

F "F" PROGRAMMING PUSH-BUTTON

– "–" PROGRAMMING PUSH-BUTTON

+ "+" PROGRAMMING PUSH-BUTTON

Connector J2 - Rapid Connection to RP Receivers

The 5 pin J2 connector allows to plug in the FAAC RP radio receivers

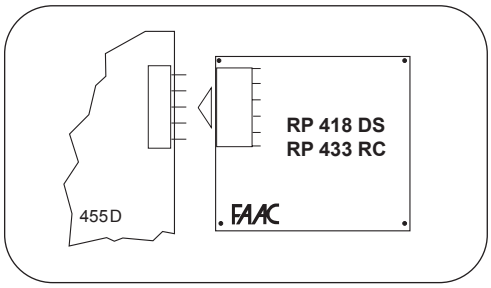

Terminal Block J3 - Power Supply

PE: Earth Connection / Ground
N: AC V~ power supply (Neutral)
L: AC V~ power supply (Line)

The installer is responsible for grounding the operator system, for providing the main power breaker switch, and for making sure that the entire gate system meets all applicable electrical codes.

5. Electric Connections

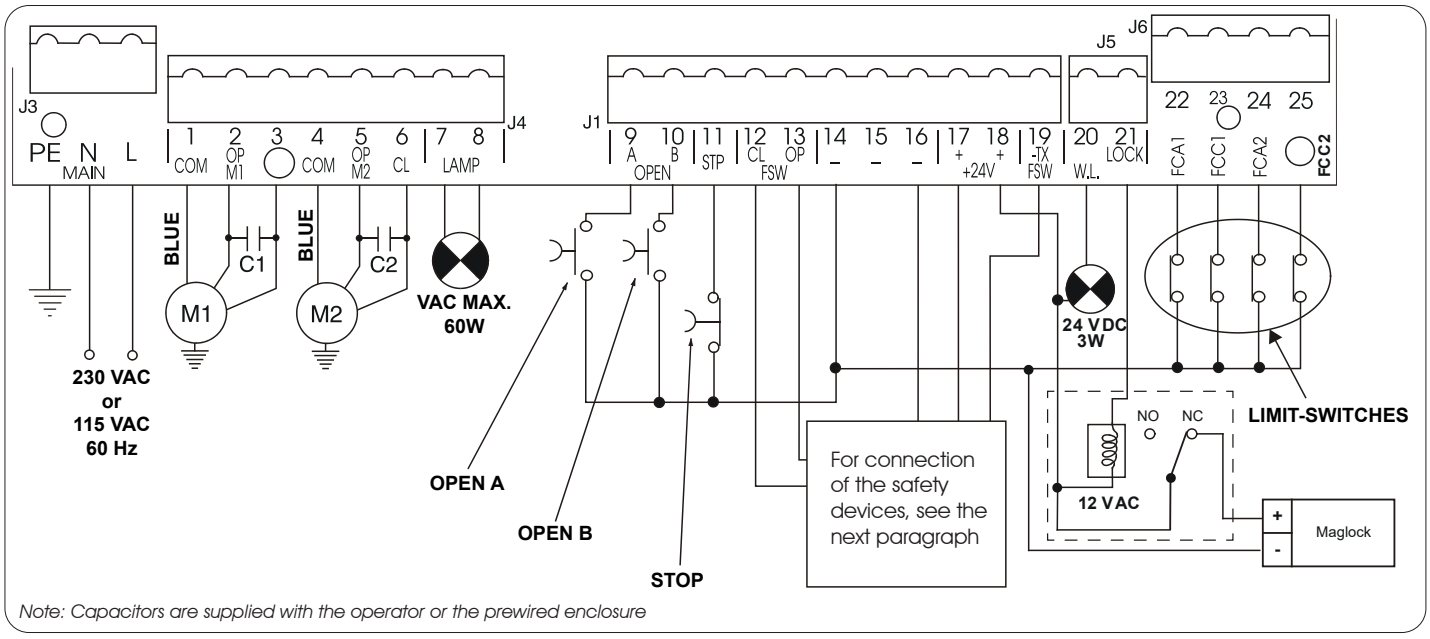

Note: Capacitors are supplied with the operator or the prewired enclosure

Terminal Block J4 - Motors and Warning Lamp

M1: COM / OP / CL: Connection to Motor 1
Must be used for single-leaf configuration

M2: COM / OP / CL: Connection to Motor 2
Cannot be used in single-leaf configurations

LAMP: Warning lamp output (AC V ~)

Terminal Block J1 - Accessories

OPEN A - "Total Opening" Command (N.O.):

Any pulse generator (push-button, detector, etc.) which, by closing a contact, commands opening and/or closing of both gate leaves. To install several full opening pulse generators, connect the N.O. contacts in parallel.

OPEN B - "Partial Opening" Command (N.O.) / Closing:

Any pulse generator (push-button, detector, etc.) which, by closing a contact, commands opening and/or closing of the leaf driven by motor M1. In the B and C logics, it always commands closing of both leaves. To install several partial opening pulse generators, connect the N.O. contacts in parallel. See logic chart for exact operation.

STP - STOP Contact (N.C.):

Any device (e.g. a push-button) which, by opening a contact, is able to stop gate movement. To install several STOP devices, connect the N.C. contacts in series. It also can act as an addional monitored opening safey.

Note: If STOP devices are not used, connect a jumper between the STP terminals and -.

CL FSW - Closing Safety Contact (N.C.):

The closing safety input is used to protect the leaf movement area during closing. While closing, an activation of the the safety device connected to this input will reverse the movement of the gate leaves. This input is inactive during the opening cycle. To be compliant with the UL325 standard **at least one monitored safety device must be connected to this input**. See the next paragraph on how to connect a monitored device. If this input is active when the gate is open it will prevent the leaf closing movement.

OP FSW - Opening safety devices contact (N.C.):

The opening safety input is used to protect the leaf movement area during opening. While opening, an activation of the the safety device connected to this input will reverse the movement of the gate leaves. This input is inactive during the closing cycle. To be compliant with the UL325 standard if this input is used to protect an entrapment zone at least one monitored safety device must be connected to it. See the next paragraph on how to connect a monitored device. If this input is active when the gate is closed it will prevent the leaf opening movement.

– - Negative for power supply to accessories

+ - 24 VDC - Positive for power supply to accessories

Important: Accessories max. load is 500 mA. To calculate current draw, refer to the instructions for individual accessories.

-TX FSW - Negative Power to photocell transmitters.

This terminal is used for the photocells monitoring feature. Compliance with the UL325 standard requires connecting the transmitter photocell negative power to this input and activating the FAIL SAFE function (see *Advanced Programming).* This will allow the 455 D board to check the correct operation of the safety photecells before each opening or closing cycle.

Terminal Block J5 - Indicator-Light and Electric Lock

W.L. - Power supply to indicator-light

Connect a 24 VDC - 3 W max. indicator-light, if necessary, between this terminal and the +24V supply. To avoid compromising correct operation of the system, do not exceed the indicated power.

LOCK - Power supply to electric lock

If necessary, connect a 12 Vac electric strike lock between this terminal and the +24V power supply. Or connect a 12 Vac relay and a Maglock following the schematic above.

Terminal Block J6 - Limit-Switches

These inputs are dedicated to the connection of opening and closing limit switches

6. Connection of Safety devices

Entrapment protection

To comply with the UL325 standard for gate operators every entrapment zone, as defined in ASTMF2200, must be protected by two independent entrapment protection devices. One of the devices is inherent in the FAAC operators or the control board design, the other can be external, like a photocell or an edge sensor.

See the following picture for the photocells positioning:

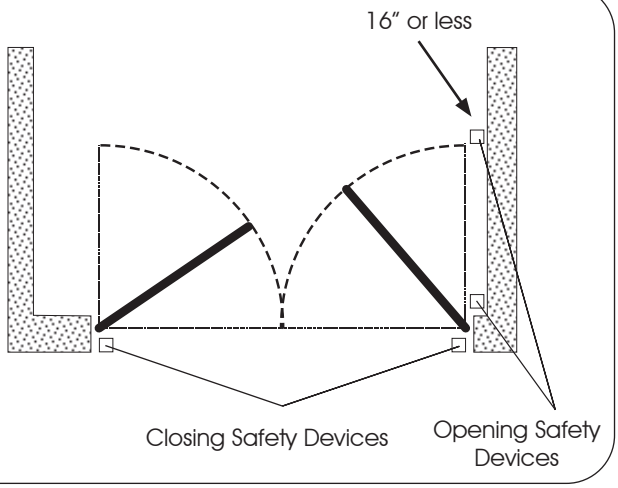

Opening Safety Devices:

Are active only during the gate opening movement, and are suitable for protecting the area between the opening leaves and fixed obstacles (walls, etc) agains the risk of entrapment

Closing Safety Devices:

Are active only during the gate closing movement, and are suitable for protecting the closing area against the risk of entrapment.

Monitored Devices:

Additionaly the UL325 standard requires that every external entrapment protection device must be monitored for presence and correct operation. The closing safety devices are always monitored, see the following picture for the wiring of a pair of photocells as closing safety devices.

NOTE: one closing safety device must always be connected for the system to work.

Connection of One Pair of Monitored Closing Photocells

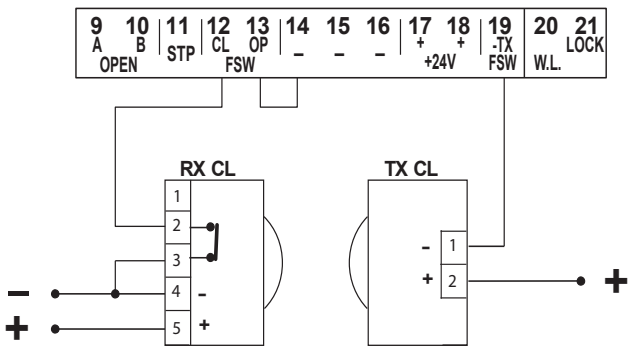

Monitoring of the opening safety devices must be enabled in the board configuration. To enable it enter in advanced programming by pressing and holding "F" and then press "+", scroll to the "FS" parameter and select "Active".

ADVANCED PROGRAMMING (F) + (+)

Display	Function	Default
FS	***OPENING FAIL SAFE:*** *If this function is activated, it enables the monitoring of the opening safety photocell before he opening movement. If the test fails the gate does not open.* YES = Active NO = Disabled	NO

Connection of One Pair of Monitored Closing Photocells and One Pair of Monitored Opening Photocells

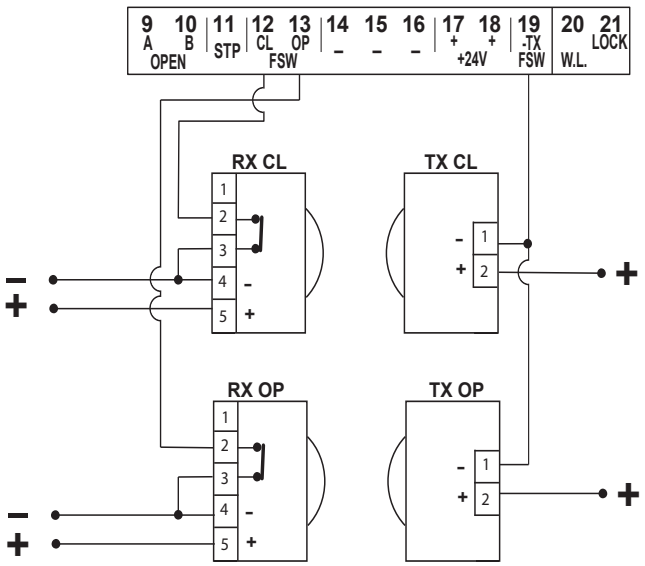

If an additional monitored opening safety device is needed it can be connected to the STP input. The "OP" parameter in the board configuration must be set to active

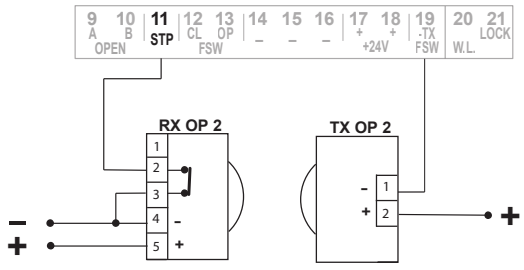

OP ***OPENING No. 2 FAIL SAFE:***

When enabled the STOP input can be used for the connection of a second monitored opening safety device.

YES = Active NO = Disabled

Only one monitored photocell can be connected to the Closing or Opening safety inputs. More than one photocell or other device can be connected to the safety inputs, but they will not be monitored.

Other devices connected to the safety inputs must have normally closed contacts and wired in series with the main monitored sensor.

See the following example of one closing safety monitored photocell and one non monitored one.

Connection of Two Pairs of Closing Photocells, One Monitored and One Non Monitored

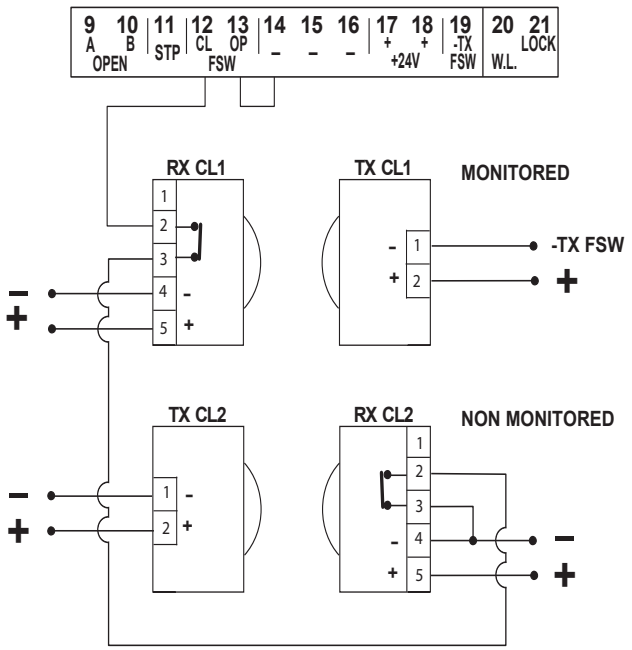

Opening/Closing Safety Devices:

They operate during the gate opening and closing movements and are suitable to protect the opening and closing areas against the risk of impact. Typically these photocells work in combination with other monitored photocell protecting closing or opening entrapment zones. In that case they can't be monitored so they can only protect against potential impact on vehicles.

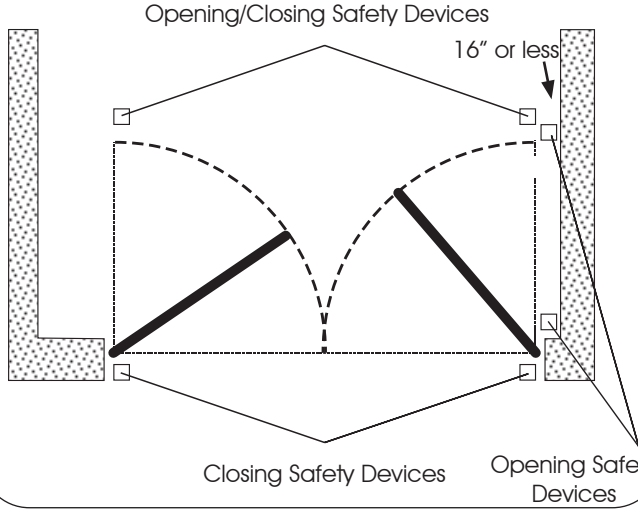

See the following connections diagrams for example of opening/closing safety wiring.

Connection of a pair of Monitored Closing Photocells, and one pair of Non Monitored Opening/Closing Photocell

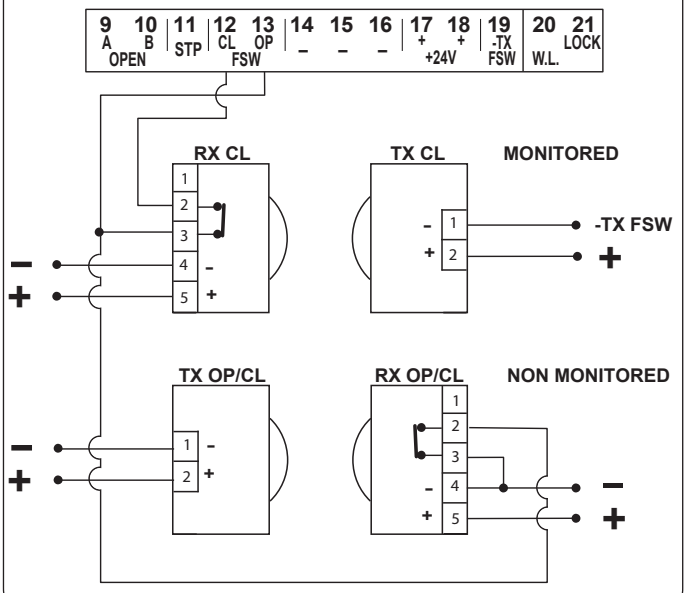

Connection of One Pair of Monitored Closing Photocells, One Pair of Monitored Opening Photocells and One pair of Non Monitored Opening/Closing Photocells

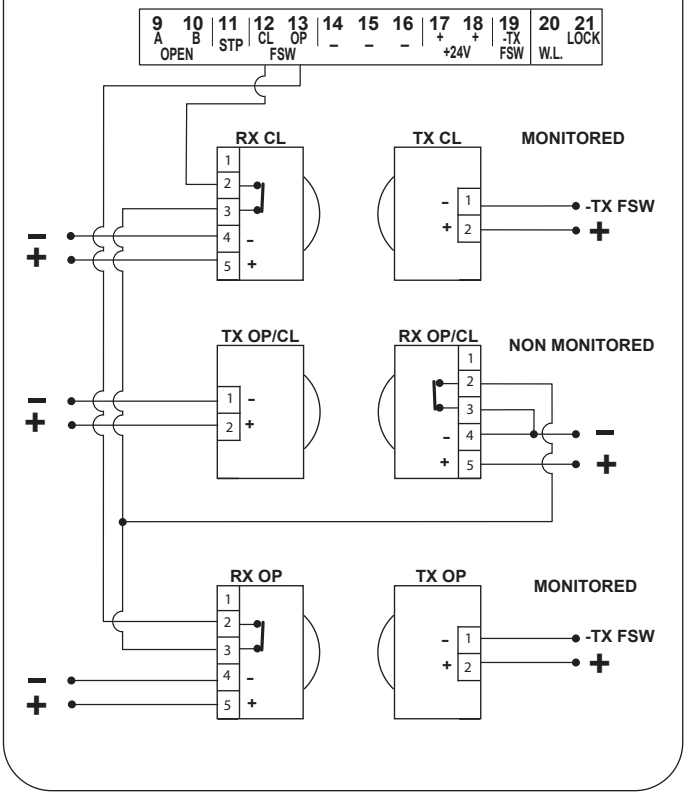

7. Operating Logics

This is a brief description of the main operating logics of the system. For a complete description please refer to Table 3

- E (semi-automatic): This mode requires a command to open and a command to close. A second command during opening stops the gate. A second command during closing reopens the gate.
- A (automatic): The gate opens on command and automatically closes after the pause time. A second command while opening is ignored; a second command during the pause phase interrupts the pause time; a second command during closing reopens the gate. A maintained open command will hold the gate open.
- S (security): The security mode is like A logic except that a second command during opening immediately closes the gate. A maintained open command will not hold the gate open.
- EP (semi-automatic, step by step): This mode requires a command to open and a command to close. A second command during opening or closing causes the gate to stop. A third command then reverses the previous motion of the gate.
- B (manned, pulsed): This mode is designed for guard station use and requires a three button switch (pulsed) to open, close, and stop the gate.
- C (manned and constant): This mode requires constant pressure switches. One to open and one to close. No pressure on a switch stops the gate.

8. Programming

To program the 455D Control Board, you have to access "*PROGRAMMING*" mode. Programming is split into two parts: *BASIC* and *ADVANCED*.

Basic Programming:

To access BASIC PROGRAMMING, press key **F**:

- Press and hold **F**, the unit will display the name of the first function / parameter.
- When you release the key, the unit will display the parameter's current value.
- Value can be modified with keys + and - .
- Press and hold **F** again, the unit will display the name of the next function / parameter.
- When you reach the last function, press **F** to exit the program, the display resumes monitoring input status.
- IMPORTANT: Make sure to exit programming mode otherwise the changes will not be saved.

The following table displays the sequence of functions accessible in BASIC PROGRAMMING:

BASIC PROGRAMMING press (F)

Display	Function	Default
LO	***OPERATING LOGICS (see tab. 3/a - h):*** E = *Semi-automatic* A = *Automatic* S = *Security* EP = *"Stepped" Semi-automatic* AP = *"Stepped" Automatic* SP = *"Stepped" Security* b = *Manned, pulsed* C = *Manned, constant*	E
PA	***PAUSE TIME:*** *This has effect only when automatic logic is selected. Adjustable from 0 to 59 secs. in one-second increments.* *Subsequently, display changes to minutes and tenths of seconds (separated by a decimal point), time is adjusted in 10-second increments, up to 4.1 minutes max. Thus, if the unit displays 2.5, Pause Time is 2 mins. and 50 secs.*	0
F1	***LEAF 1 FORCE:*** *Adjusts thrust of Motor 1.* 1 = *minimum force* 50 = *maximum force (*)*	25
F2	***LEAF 2 FORCE:*** *Adjusts thrust of Motor 2.* 1 = *minimum force* 50 = *maximum force (*)*	25
cd	***LEAF 1 CLOSING DELAY:*** *Delays closing start of leaf 1 with respect to leaf 2. Adjustable from 0 to 4.1 minutes (see Pause Time).*	0
tL	***TIME LEARNING (see Section 10):*** *Enables the selection between "simple" learning and "complete" (manual choice of deceleration and stop points) learning.* ***Simple Learning:*** (+) ≈ ***1 s.*** ***Complete Learning:*** (+) ***> 3 s.***	
In	*Exit from programming and return to inputs status monitoring.*	

(*) For hydraulic operators, set force to the maximum level.

Advanced Programming:

To access ADVANCED PROGRAMMING, press and hold key F and then press key +:

- Release key +, the unit displays the name of the first function.
- Release key F, modify the value of the function with keys + and -.
- Press and hold key F, the unit displays the name of the next function, and if you release it, the value that can be modified with keys + and -.
- When you reach the last function, press F to exit the program, the unit resumes monitoring input status.

The following table shows the sequence of functions accessible in ADVANCED PROGRAMMING:

ADVANCED PROGRAMMING (F) + (+)

Display	Function	Default
bo	***MAXIMUM TORQUE AT INITIAL THRUST:*** *The motors operate at maximum torque (ignoring the torque setting) at start of movement. Useful for heavy leaves.* *4 = Active no = Disabled*	no
cS	***LAST STROKE AT CLOSING:*** *The motors are activated at full speed for 1 second to facilitate locking of the electric lock.* *4 = Active no =Disabled*	no
rS	***REVERSING STROKE:*** *Before opening, while the gate is closed, the motors thrust to close for 2 seconds thus facilitating release of the electric lock.* *4 = Active no = Disabled*	no
od	***LEAF 2 OPENING DELAY (2 s):*** *Enables delayed start (at opening) of leaf 2, avoiding interference between leaves.* *4 = Active no = Disabled*	no
FS	***OPENING FAIL SAFE:*** *If this function is activated, it enables the monitoring of the opening safety photocell before the opening movement. If the test fails the gate does not open.* *4 = Active no = Disabled*	no
PF	***PRE-FLASHING (5 s):*** *Activates the flashing lamp for 5 seconds before start of movement.* *4 = Active no = Disabled*	no
EL	***ELECTRIC LOCK ON LEAF 2:*** *For using the electric lock on leaf 2 instead of on leaf 1.* *4 = Active no = Disabled*	no
SP	***INDICATOR-LIGHT:*** *0 : the output functions as a standard indicator-light (ON at opening and pause, flashing at closing, and OFF when gate is closed).* *1 : the output is ON when the gate is open or in pause. OFF in all other conditions.* *2 the output is ON when the gate is closed. OFF in all other conditions.* *All other values correspond to the extra time compared to normal work time (opening or closing) when the output can be used - via a relay - to power a courtesy light. Time can be adjusted from 1 to 59 sec. in 1 sec. steps, and from 1.0 to 4.1 min. in 10 sec. steps.*	0
Ph	***CLOSING PHOTOCELLS REVERSE AT RELEASE:*** *Enable this function if you want the closing photocells to stop movement and reverse at release. Default setting is immediate reverse.* *4 = Active no = Disabled*	no
oP	***OPENING No. 2 FAIL SAFE:*** *When enabled the STOP input can be used for the connection of a second monitored opening safety device* *4 = Active no = Disabled*	no
AS	***ASSISTANCE REQUEST (combined with next function):*** *If activated, at the end of countdown (settable with the next function i.e. "Cycle programming") it affects 8 s of pre-flashing at every Open pulse (job request). Can be useful for setting scheduled maintenance jobs.* *4 = Active no = Disabled*	no
nC	***CYCLE PROGRAMMING:*** *For setting countdown of system operation cycles. Settable (in thousands) from 0 to 99 thousand cycles. The displayed value is updated as cycles proceed.* *This function can be used to check use of the board or to exploit the "Assistance request".*	0
EC	***EXTRA WORK TIME:*** *If reversing occurs, and if the leaf does not reach its end contact point, you can activate this function to increase work time.* *4 = Active no = Disabled*	no
In	*Exit from programming and return to inputs status monitoring.*	

***NOTE**: Parameter modifications take effect immediately. Exit out of programming to save changes. If the equipment is powered down before returning to normal status monitoring, any unsaved modifications will be lost.*

To restore programming defaults, press and hold the three buttons +, -, F simultaneously for 5 seconds.

9. Start-up

LED Indicators:

The board has a two-digit display. When not in "PROGRAMMING" mode, this display is used to indicate the status of inputs. The figure below shows how the LED segments are mapped to the corresponding the inputs.

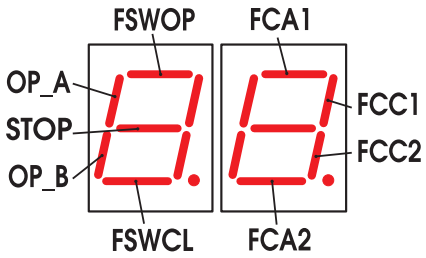

The table below shows the status of the LEDs in relation to the status of the inputs.

Note the following: **LED ON** = closed contact
LED OFF = open contact

Operation of the Status Signaling LEDs

LEDs	ON	OFF
OP_A	Command activated	**Command inactive**
OP_B	Command activated	**Command inactive**
STOP	**Command inactive**	Command activated
FSWCL	**Safety devices clear**	Safety devices triggered
FSWOP	**Safety devices clear**	Safety devices triggered
FCA1 (if used)	**Limit switch free**	Limit switch triggered
FCC1 (if used)	Limit switch free	**Limit switch triggered**
FCC2 (if used)	Limit switch free	**Limit switch triggered**
FCA2 (if used)	**Limit switch free**	Limit switch triggered

The status of the LEDs while the gate is closed at rest are shown in bold.

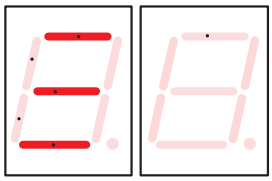

This is the normal status of the display with all the safety inputs clear and no activation signal present

Rotation direction and force check:

1. Program the functions of the 455 D control board according to need, as previously shown.
2. Turn power off to the control board.
3. Release the operators and manually move the gate to the mid-point of the opening angle.
4. Re-lock the operators.
5. Restore power.
6. Send an opening command on the OPEN A input and verify that the gate leaves start moving towards the open position

Note: If the first OPEN A pulse starts a closing movement, turn power off and reverse the phases of the electric motor (red and black wires) on the 455 D control board.

7. Check force setting of the motors, modify if necessary.

Note: For hydraulic operators, like the 400, force should be programmed to maximum level (50)

8. Stop leaf movement with a pulse on the STOP input or turning off power.
9. Release the operators, close the leaves and re-lock the operators.

Opening/closing time is established by a time learning procedure which can be accomplished in "simple" or "complete" modes. The simple mode doesn't allow a slow down phase in the operator, while the complete mode does.

The slow down can be useful to reduce the mechanical stress on the gate, but it can create problems in high wind conditions.

10. Learning Operating Times

WARNING: *During the learning procedure, safety devices are disabled! Avoid crossing the leaf movement area when this operation is carried out.*

Make sure travel limit mechanical stops are present.

- SIMPLE LEARNING (Without Slow Down):

Check that the leaves are closed. Enter *"BASIC PROGRAMMING,"* select the TIME LEARNING function and then press the + push-button for **1 second**. The display begins flashing and the leaves begin to open.

As soon as the leaves reach the opening contact point, provide an OPEN A pulse (with the key operated push-button or with the radio control) to stop the movement. The leaves stop and the display stops flashing.

Press push-button **F** to exit and save the programming. The procedure is complete and the gate is ready to operate.

- COMPLETE LEARNING (With Slow Down):

Check that the leaves are closed. Enter *"BASIC PROGRAMMING,"* select the TIME LEARNING function and then press the + push-button for more than **3 seconds**. The display begins flashing and leaf 1 begins to open. The following functions can be performed by sending OPEN A pulses (by key push-button or radio control).

A total of 8 OPEN A commands required:

1. Slow down at opening of leaf 1
2. Leaf 1 stops at opening and leaf 2 begins its opening movement
3. Slow down at opening of leaf 2
4. Leaf 2 stops at opening and immediately begins its closing movement
5. Slow down at closing of leaf 2
6. Leaf 2 stops at closing and leaf 1 begins its closing movement
7. Slow down at closing of leaf 1
8. Leaf 1 stops at closing

When the display stops flashing, press push-button **F** to exit and save the programming. The procedure is complete and the gate is ready to operate.

Notes:

- *If you wish to eliminate deceleration in certain stages, wait for the leaf to reach its stop-limit and supply 2 consecutive Open pulses (by 1 second).*
- *If only one leaf is present, the entire sequence must nevertheless be completed. When the leaf has finished opening, supply 5 Open pulses until the leaf begins to close, and then resume normal operation.*

11. Final Tests

Once programming is complete and the proper operating times are stored in the board's memory perform a complete test the system. Verify that the operator(s) run properly and, most importantly, check that force is adequately adjusted and that safety devices are operating correctly.

After simple or complete learning the board will add 3 sec. to the programmed time so the operators will run against the stops.

Monitored safety test:

IMPORTANT: To make sure that the safety photocells protecting entrapment zones are monitored properly install a temporary jumper on the N.C. output of the photocell and give an OPEN A command. The gate must not move, otherwise check the wiring of the photcells and make sure that FAIl SAFE is enabled in Advanced Programming

Tab. 3/a

Logic "E"	PULSES					
GATE STATUS	OPEN-A	OPEN-B	STOP	OPENING SAFETY DEVICES	CLOSING SAFETY DEVICES	OP/CL SAFETY DEVICE
CLOSED	Opens the leaf	Opens single leaf	No effect (OPEN disabled)		No effect	No effect (OPEN disabled)
OPEN	Re-closes the leaf immediately (3)			No effect (if on part.opng. OPEN A disabled)	No effect (3) (OPEN disabled)	No effect (OPEN disabled)
CLOSING	Re-opens the leaf immediately		Stops operation	No effect (saves OPEN)	see paragraph 5.2.	Locks and, on release, reverses to open
OPENING	Stops operation (3)			Reverses to close	No effect	Locks and, on release, continues opening
LOCKED	Closes the leaf (with Closing Safety devices engaged, opens at the 2nd pulse) (3)		No effect (OPEN disabled)	No effect		No effect (OPEN disabled)

Tab. 3/b

Logic "A"	PULSES					
GATE STATUS	OPEN-A	OPEN-B	STOP	OPENING SAFETY DEVICES	CLOSING SAFETY DEVICES	OP/CL SAFETY DEVICE
CLOSED	Opens the leaf and closes it after pause time (1)	Opens single leaf and closes after pause time (1)	No effect (OPEN disabled)		No effect	No effect (OPEN disabled)
OPEN on PAUSE	Reloads pause time (1)(3)			No effect (if on part.opng. OPEN A disabled)	Reloads pause time (1) (3)	Reloads pause time (1) (OPEN disabled)
CLOSING	Re-opens the leaf immediately (1)		Stops operation	No effect (saves OPEN)	see paragraph 5.2.	Locks and, on release, reverses to open
OPENING	No effect (1) (3)			Reverses to close	No effect	Locks and, on release, continues opening
LOCKED	Closes the leaf (3)		No effect (OPEN disabled)	No effect		No effect (OPEN disabled)

Tab. 3/c

Logic "S"	PULSES					
GATE STATUS	OPEN-A	OPEN-B	STOP	OPENING SAFETY DEVICES	CLOSING SAFETY DEVICES	OP/CL SAFETY DEVICE
CLOSED	Opens the leaf and closes it after pause time	Opens single leaf and closes after pause time	No effect (OPEN disabled)		No effect	No effect (OPEN disabled)
OPEN on PAUSE	Re-closes the leaf immediately (3)			No effect (if on part.opng. OPEN A disabled)	On release, closes after 5" (OPEN disabled) (3)	On release, closes after 5" (OPEN disabled)
CLOSING	Re-opens the leaf immediately		Stops operation	No effect (saves OPEN)	see paragraph 5.2.	Locks and, on release, reverses to open
OPENING	Re-closes the leaf immediately (3)			Reverses to close	No effect (saves OPEN)	Locks and, on release, continues opening
LOCKED	Closes the leaf (3)		No effect (OPEN disabled)	No effect		No effect OPEN disabled)

Tab. 3/d

Logic "EP"	PULSES					
GATE STATUS	OPEN-A	OPEN-B	STOP	OPENING SAFETY DEVICES	CLOSING SAFETY DEVICES	OP/CL SAFETY DEVICE
CLOSED	Opens the leaf	Opens leaf for the partial opening time	No effect (OPEN disabled)		No effect	No effect (OPEN disabled)
OPEN	Re-closes the leaf immediately (3)			No effect (if on part.opng. OPEN A disabled)	No effect (OPEN disabled) (3)	No effect (OPEN disabled)
CLOSING	Stops operation		Stops operation	No effect (saves OPEN)	see paragraph 5.2.	Locks and, on release, reverses to open
OPENING	Stops operation (3)			see paragraph 5.2.	No effect	Locks and, on release, continues opening
LOCKED	Restarts movement in reverse direction (3) (always closes after a Stop)		No effect (OPEN disabled)	No effect (if it must open, it disables OPEN)	No effect (if it must close, it disables OPEN)	No effect (OPEN disabled)

(1) If maintained, it prolongs the pause until disabled by the command (timer function)

(2) If a new pulse occurs within 2 seconds after reversing, it immediately stops operation.

(3) During the partial opening cycle, an OPEN A pulse causes total opening.

NB.: Effects on other active pulse inputs in brackets.

Tab. 3/e

Logic "AP"	PULSES					
GATE STATUS	OPEN-A	OPEN-B	STOP	OPENING SAFETY DEVICES	CLOSING SAFETY DEVICES	OP/CL SAFETY DEVICE
CLOSED	Opens the leaf and closes it after pause time	Opens single leaf and closes after pause time	No effect (OPEN disabled)		No effect	No effect (OPEN disabled)
OPEN on PAUSE	Stops operation (3)		Stops operation	No effect (if on part.opng. OPEN A disabled)	Reloads pause time (3) (OPEN disabled)	Reloads pause time (OPEN disabled)
CLOSING	Re-opens the leaf immediately			No effect (saves OPEN)	see paragraph 5.2.	Locks and, on release, reverses to open
OPENING	Stops operation (3)			Reverses to close	No effect	Locks and, on release, continues opening
LOCKED	Closes the leaf (with Closing Safety devices engaged, opens at the 2nd pulse) (3)		No effect (OPEN disabled)	No effect		No effect (OPEN disabled)

Tab. 3/f

Logic "SP"	PULSES					
GATE STATUS	OPEN-A	OPEN-B	STOP	OPENING SAFETY DEVICES	CLOSING SAFETY DEVICES	OP/CL SAFETY DEVICE
CLOSED	Opens the leaf and closes it after pause time	Opens single leaf and closes after pause time	No effect (OPEN disabled)		No effect	No effect (OPEN disabled)
OPEN on PAUSE	Stops operation (3)		Stops operation	No effect (if on part.opng. OPEN A disabled)	On release, closes after 5" (OPEN disabled) (3)	On release, closes after 5" (OPEN disabled)
CLOSING	Re-opens the leaf immediately			No effect (saves OPEN)	see paragraph 5.2.	Locks and, on release, reverses to open
OPENING	Stops operation (3)			Reverses to close	No effect (saves OPEN)	Locks and, on release, continues opening
LOCKED	Closes the leaf (3)		No effect (OPEN disabled)	No effect		No effect OPEN disabled)

Tab. 3/g

Logic "B"	PULSES					
GATE STATUS	OPEN-A (opening)	OPEN-B (closing)	STOP	OPENING SAFETY DEVICES	CLOSING SAFETY DEVICES	OP/CL SAFETY DEVICE
CLOSED	Opens the leaf	No effect	No effect (OPEN A disabled)		No effect	No effect (OPEN A disabled)
OPEN	No effect	Closes the leaf	No effect (OPEN B disabled)	No effect	No effect (OPEN B disabled)	No effect (OPEN B disabled)
CLOSING	Reverses to open	No effect	Stops operation	No effect (saves OPEN A)	Stops operation (OPEN-B disabled)	Stops operation (OPEN-A/B disabled)
OPENING	No effect	No effect		Stops operation (OPEN-A disabled)	No effect	
LOCKED	Opens the leaf	Closes the leaf	No effect (OPEN A/B disabled)	No effect (OPEN-A disabled)	No effect (OPEN B disabled)	No effect (OPEN A/B disabled)

Tab. 3/h

Logic "C"	CONTROLS ALWAYS HELD DOWN		PULSES			
GATE STATUS	OPEN-A (opening)	OPEN-B (closing)	STOP	OPENING SAFETY DEVICES	CLOSING SAFETY DEVICES	OP/CL SAFETY DEVICE
CLOSED	Opens the leaf	No effect (OPEN-A disabled)	No effect (OPEN A disabled)		No effect	No effect (OPEN A disabled)
OPEN	No effect (OPEN-B disabled)	Closes the leaf	No effect (OPEN-A/B disabled)	No effect (OPEN A disabled)	No effect (OPEN B disabled)	No effect (OPEN B disabled)
CLOSING	Stops operation	/	Stops operation	No effect	Stops operation (OPEN-B disabled)	Stops operation (OPEN-A/B disabled)
OPENING	/	Stops operation		Stops operation (OPEN-A disabled)	No effect	

(1) If maintained, it prolongs the pause until disabled by the command (timer function)

(2) If a new pulse occurs within 2 seconds after reversing, it immediately stops operation.

(3) During the partial opening cycle, an OPEN A pulse causes total opening.

NB.: Effects on other active pulse inputs in brackets.

13. Prewired Enclosure

The 455D board can be easily installed in a prewired enclosure supplied by FAAC that integrates a number of functions: Power ON-OFF switch and accessory power outlet, loop detector sockets prewired to the board, large terminal strips to easily connect activations, accessories and safeties.

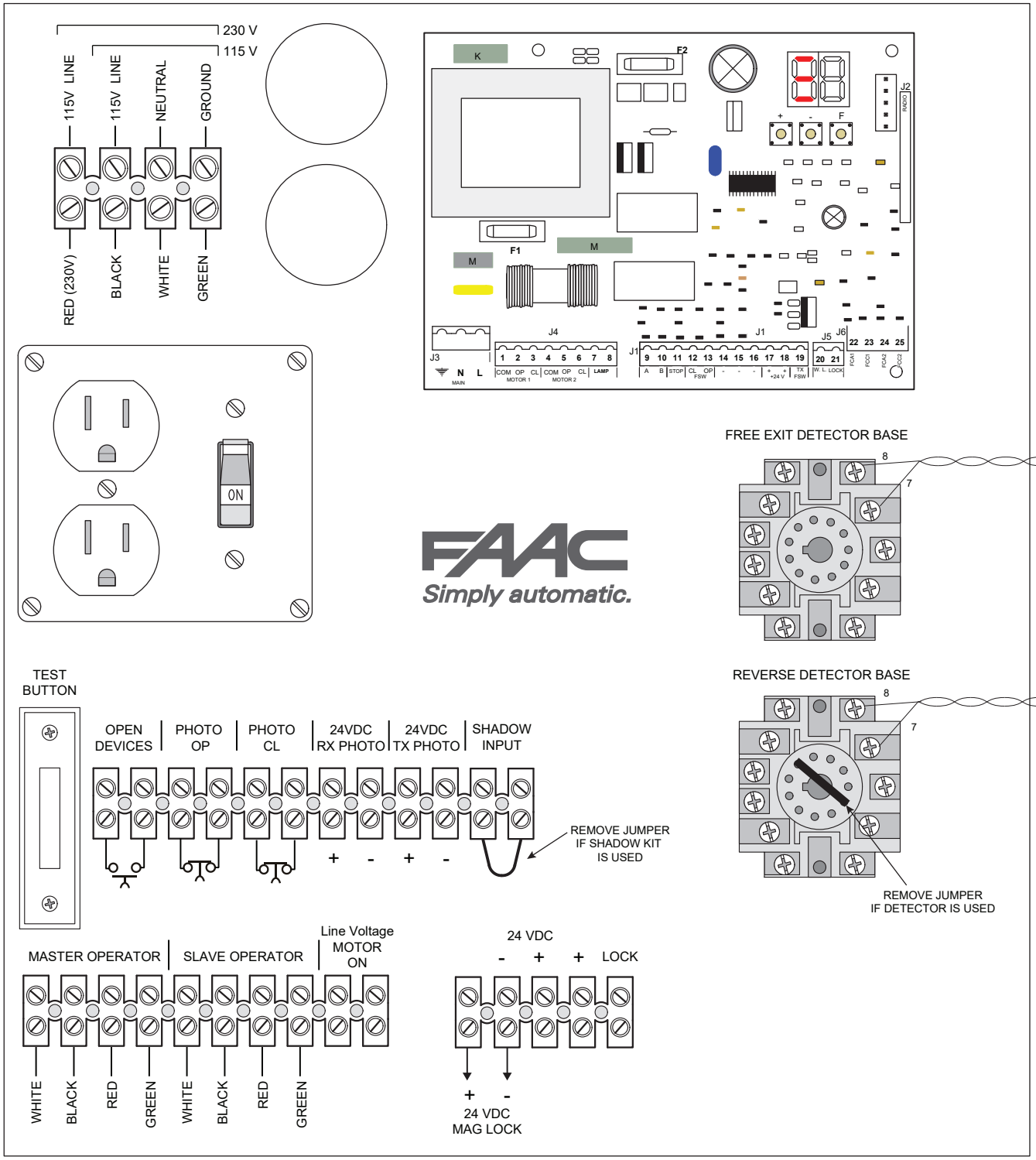

AC Power Wiring Guidelines

1. Check local wiring codes in all cases and follow all local building codes. Wiring and hookup should be performed by qualified electricians/installers only.
2. AC power should be supplied from a circuit breaker panel and must have its own dedicated circuit breaker. This supply must include a green ground conductor.
3. Properly ground the gate operator to minimize or prevent damage from power surges and/or lightning. Use a grounding rod if necessary. A surge suppressor is recommended for additional protection.

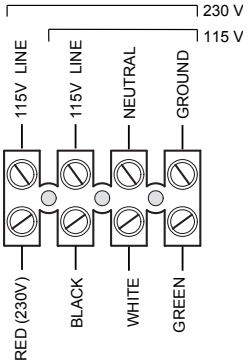

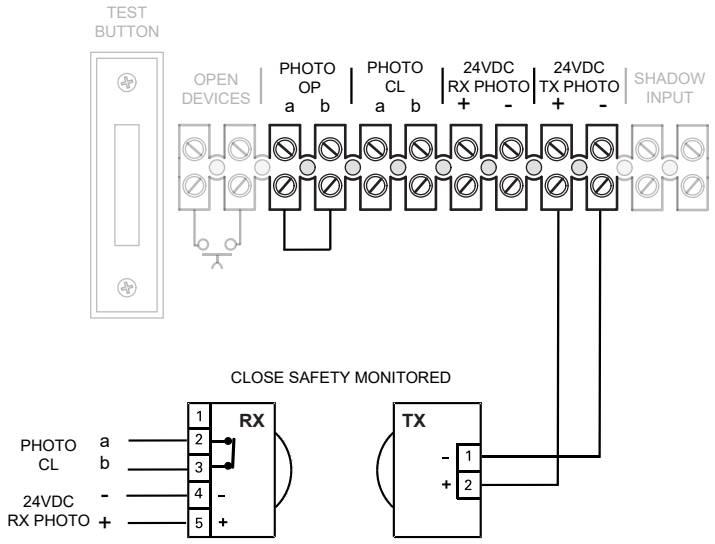

Monitored safety connections

The prewired enclosure comes with dedicated terminal blocks for the connection of safety photocells that can be monitored by the control board for presence and correct operation. One closing and one opening photocells can be connected to the dedicated terminals.

1. Connect the trasnsmitter photocell(s) to the 24VDC TX PHOTO terminals as shown on the drawing
2. Connect the receiver photocell(s) 24V power to the 24VDC RX PHOTO terminals as shown on the drawing
3. For applications that need only closing safeties connect the N.C. outputs of the photocell to the PHOTO CL terminals and connect a jumper to the PHOTO OP terminals
4. For applications that need closing and opening safeties connect the N.C. outputs of the photocells to the PHOTO CL and PHOTO OP terminals. Program the FS paramenter in advance programming to Y

IMPORTANT: The operator requires the connection of the closing safety photocell to work.

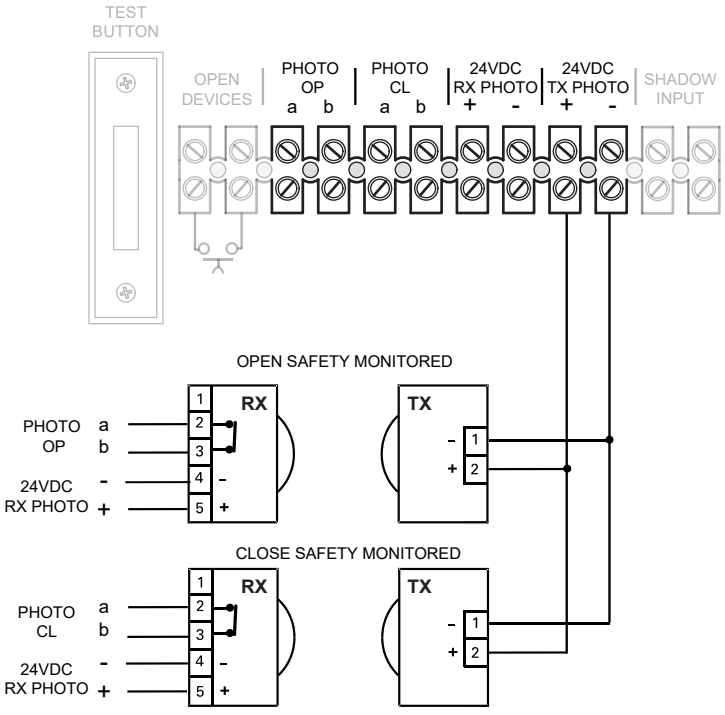

Maglock connection

The prewired enclosure comes with dedicated terminal blocks for the connection of a relay to drive a Maglock.

The Maglock kit can be ordered separately as an accessory. Refer to this schematic for the connections.

If using non-FAAC relay make sure the minimum switch voltage is less than 12Vac

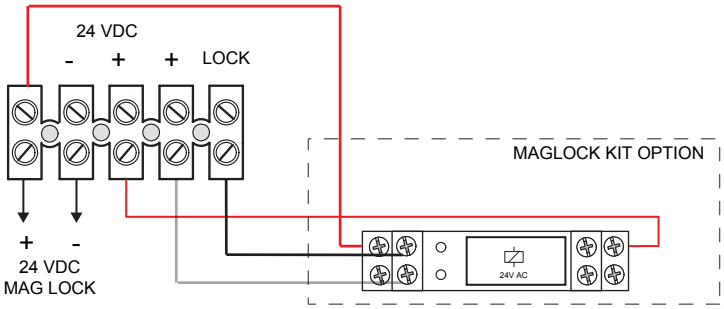

Shadow Loop kit option

The prewired enclosure comes with dedicated terminal blocks for the connection of a relay and a loop detector socket to implement the shadow loop functionality. The Shadow loop kit can be ordered separately as an accessory.

Refer to this schematic for the connections.

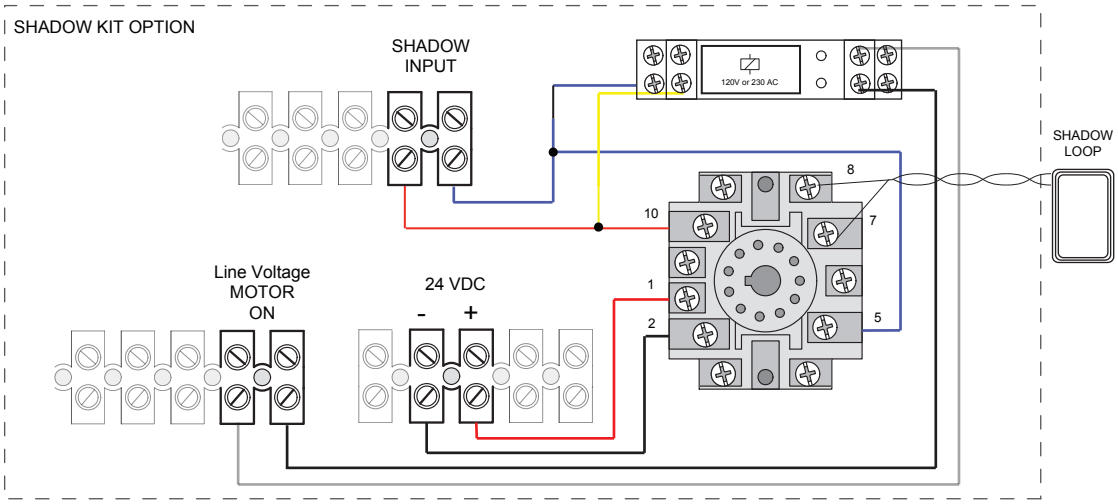

400 CBAC

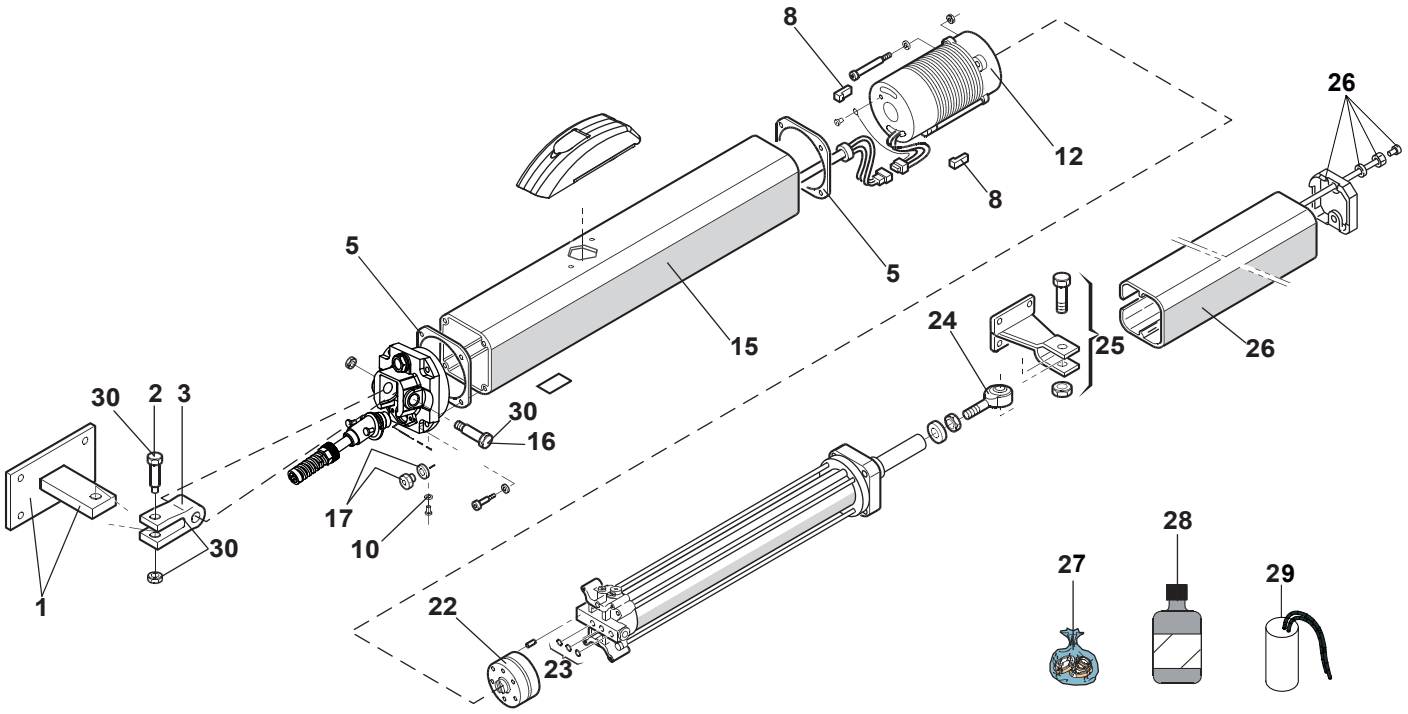

Part	Part Number	Description
1	72840065	Rear Mounting Bracket and Plate
2	7182075	Pin Short
3	7228015	Rear Fork Die Cast
5	70991015	Gasket (D80)
8	63003303	Vibration Dampener (20 pc pack)
10	7094065	Copper Washer
12	77000425	Motor 115V 1400 Rpm 25uF
	7700205	Motor 220V 1400 Rpm 8uF
15	7161825	Operator Body 400
	7161835	Operator Body 400 EG
16	7182175	Long Pin
17	7110015	Oil Plug

Part	Part Number	Description
22	3204425	Cast Iron Pump Lobe 1 Lt
23	7090010015	O-Ring 4.48 x 1.78 mm
24	3146.0001	M12 Swivel Joint
25	7220355	Front Mounting Bracket 400
	7220365	Front Mounting Bracket 400 EG
26	63003331	400 Protective Cover
	63003329	400 Protective EG Cover Group
27	2167.1	Seal kit
28	714019 Qt.1	Oil 1 Quart Bottle FAAC HP
	7140251 QT.1	Oil 1 Quart Bottle Arctic FAAC HP
29	2705	Capacitor 115V 25uf
	2707	Capacitor 220V 8uf
30	4900645	Rear Fork Kit

Cylinder

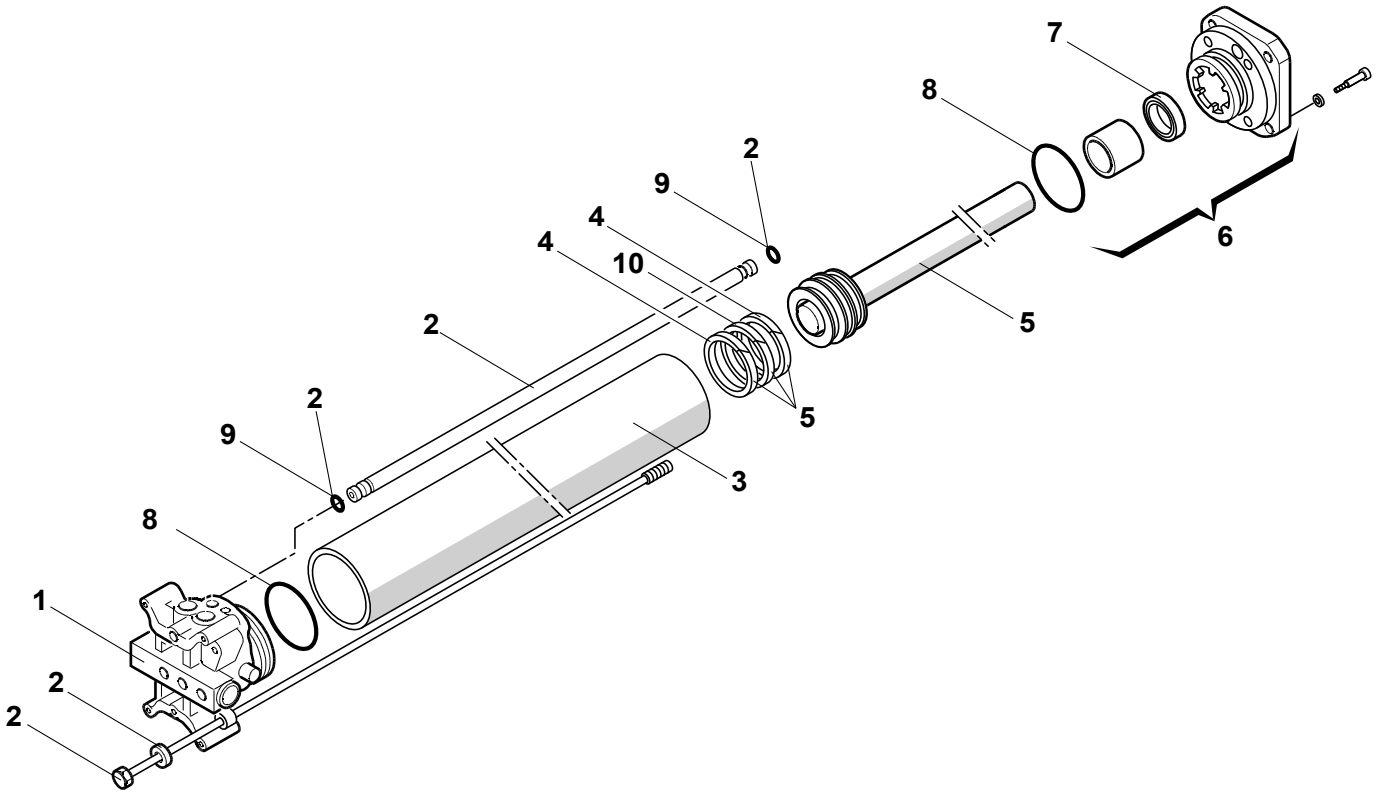

Part	Part Number	Description
1	4994655	Distribution Flange CBAC
2	63003328	Retract Tube and Tie Rods
	63003327	Retract Tube and Tie Rods EG
3	7366025	Cylinder
	7366015	Cylinder EG
4	7091015	Piston Rod Packing
5	4350105	Piston Assembly 400 Riveted
	4350115	Piston Assembly 400 Riveted EG
6	4994625	Front Flange
7	63000315	Front Flange Seal
8	63000148	O-ring 2.62x39.34mm (Pack of 5)
9	7090815	O-Rin Retract Tube
10	7094505	Piston Guide Ring

Distribution Flange

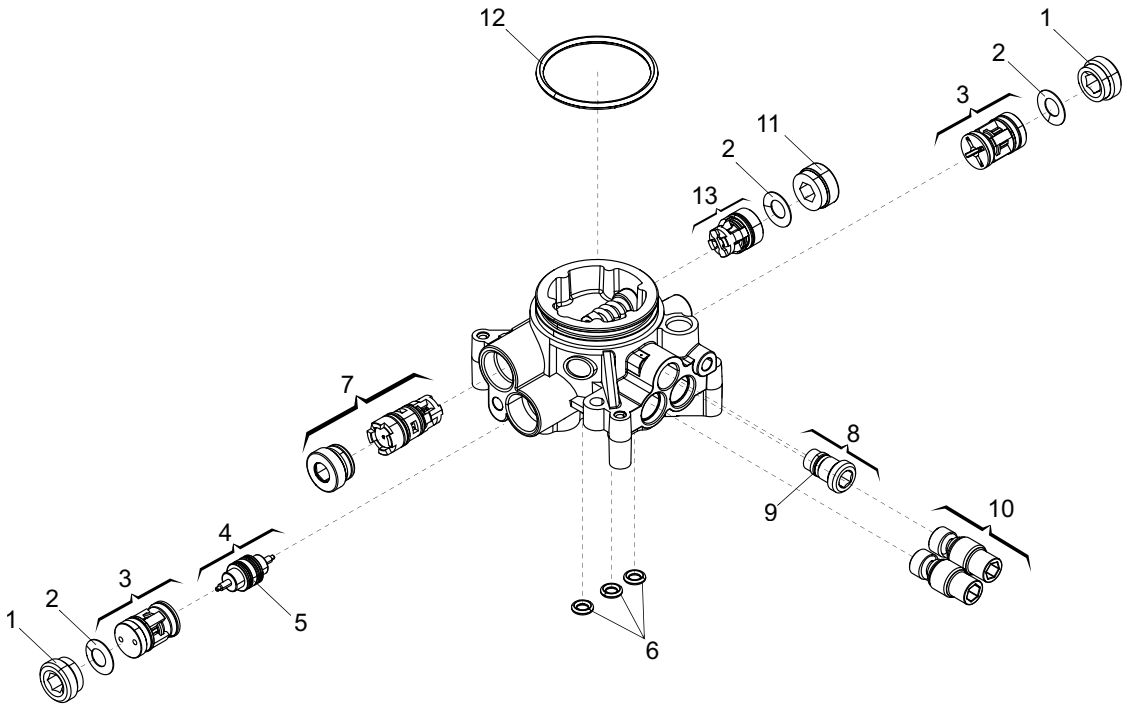

Part	Part Number	Description
1	7049005	Brass Valve Retainer
2	63000577	Washer Cup Spring (30 pc pack)
3	4404085	Lock Valve
4	4180285	Shuttle Piston
5	7090300015	O-Ring 7.66 x 1.78 mm (20 pc pack)
6	7090010015	O-Ring 4.48 x 1.78 mm
7	4404095	Inlet Valve (Bi-Directional)
8	4180195	Manual Release
9	7090280015	O-Ring 5.28 X 1.78mm
10	4180415	Bypass Cap
11	7049135	Valve Retainer
12	63000148	O-ring 2.62 x 39.34mm (5 pc pack)
13	4404065	Inlet Valve

Locking Cap

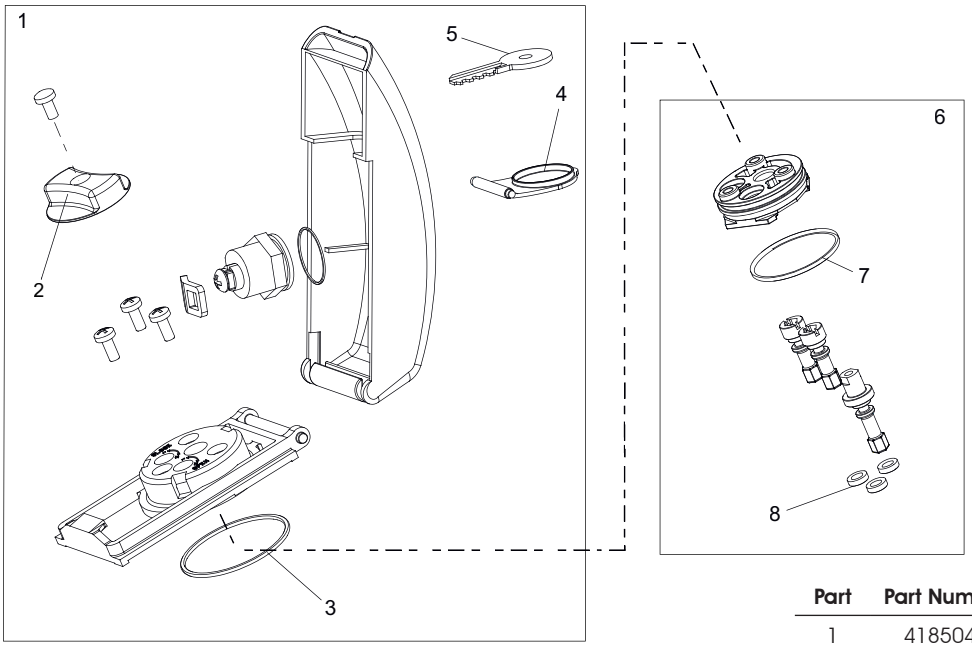

Part	Part Number	Description
1	4185045	Locking Cap Kit
2	7290445	Manual Release Knob w/ Screw
3	7090865	O-Ring (Base to Body)
4	7275275	Keyhole Cover
5	7131005	Viro Manual Release/Door Key
6	490326	Manual Release Kit
7	7090855	O-Ring Locking Cap
8	7090845	O-Ring, Extensions

Rear Flange

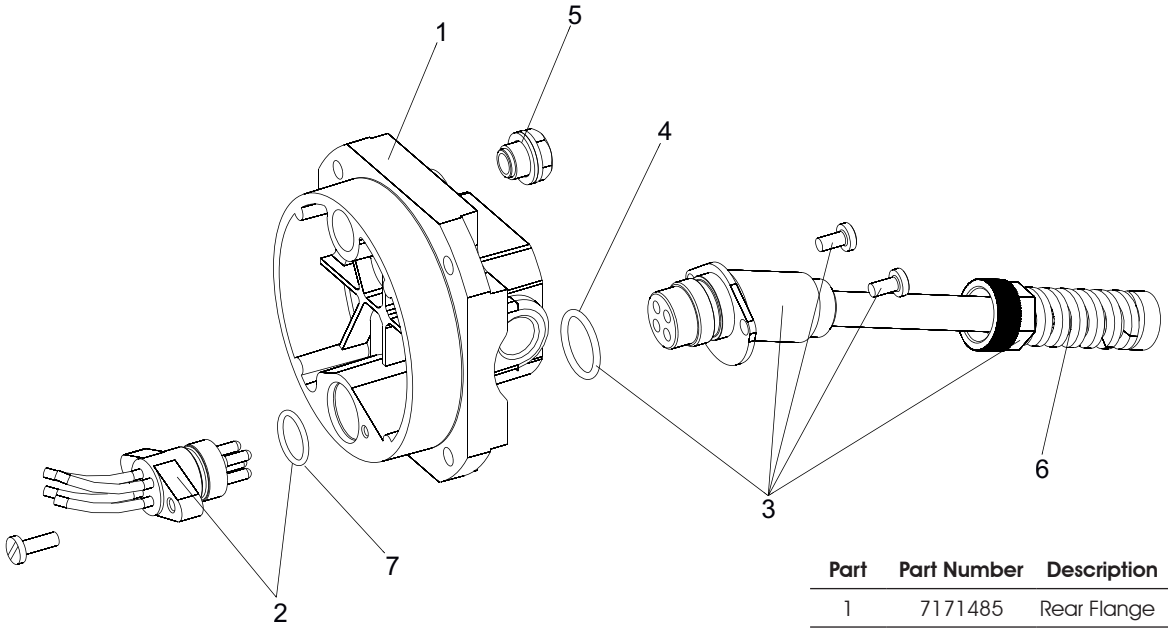

Part	Part Number	Description
1	7171485	Rear Flange
2	417010	Wiring Harness
3	4284065	Molded Cable Female Kit
4	7090290015	O-Ring 15.60 X 1.78 mm
5	7110015	Oil Plug
7	7090080025	O-Ring 11.91 x 2.62 mm (Bag of 10)

LIMITED WARRANTY

FAAC International, Inc. ("Seller") warrants the first Purchaser of the product to be free from defects in material and workmanship for a specific period as defined by the Warranty disclosure on the website www.faacusa.com. The Warranty Period commences from the date of invoice.

Control Boards, Accessories or Spare Parts factory installed or sold with any of the products above carry the same warranty period as the product they are sold with, excluding batteries that carry a maximum 2 year warranty.

Products repaired under warranty carry the remainder of the original warranty period. For products repaired outside of warranty, the Seller warrants that all parts used for the repair will be free from defects in materials and workmanship for a period of ninety (90) days.

Defective products must be returned to Seller, freight prepaid by Purchaser, within the warranty period. A Return Material Authorization Number (RMA) must be obtained before product is returned. Items returned will be repaired or replaced, at Seller's option, upon an examination which discloses to the satisfaction of the Seller that the item is defective. The Seller will return the warranted item freight prepaid.

This limited Warranty covers the product under the normal use and service for which it was intended, provided it has been properly installed and operated. Seller's obligations under this warranty shall be limited to the repair or exchange of any part. This warranty shall not apply to products or parts thereof which have been repaired or altered, without Seller's written consent, outside of Sellers's workshop or altered in any way so as, in the judgment of Seller, to affect adversely the stability or reliability of the product(s) or has been subject of misuse, negligence, or accident, or has not been operated in accordance with the product's instructions or has been operated under conditions more severe than, or otherwise exceeding, those set forth in the specifications for such product(s).

When the warranty service involves the exchange of an operator or part, the item the Seller replaces becomes its property and the replacement becomes Purchaser's property. The Purchaser represents that all removed items are genuine and unaltered. The replacement may not be new but will be in good working order and at least functionally equivalent to the item replaced. The replacement assumes the warranty service status of the replaced item.

The products are not warranted to meet the specific requirements, if any, of safety codes of any particular state, municipality, or other jurisdiction, and the Seller doesn't assume any risk or liability whatsoever resulting from the use thereof, whether used singly or in combination with other machines or apparatus.

The Seller does not assume nor authorizes any person to assume for them any other liability in connection with the sale or use of the products of beyond that extended herein.

The warranty hereinabove set forth shall not be deemed to cover maintenance parts, including, but not limited to hydraulic oil, motor brushes, or the like. No agreement to replace or repair shall constitute an admission by the Seller of any legal responsibility to effect such replacement to make such repair, or otherwise.

All products sold by the Seller are subject to design and/or appearance modifications, which are production standards at the time of shipment. The Seller may, but shall not be required to, modify or update products shipped prior to a current production standard.

THIS WARRANTY IS EXPRESSLY IN LIEU OF ALL OTHER WARRANTIES EXPRESSED OR IMPLIED INCLUDING THE WARRANTIES OF MERCHANTABILITY AND FITNESS FOR USE. THIS WARRANTY SHALL NOT APPLY TO PRODUCTS OR ANY PART THEREOF WHICH HAVE BEEN SUBJECT TO ACCIDENT, NEGLIGENCE, ALTERATION, ABUSE, OR MISUSE OR IF DAMAGE WAS DUE TO IMPROPER INSTALLATION OR USE OF IMPROPER POWER SOURCE, OR IF DAMAGE WAS CAUSED BY FIRE, FLOOD, LIGHTNING, ELECTRICAL POWER SURGE, EXPLOSION, WIND STORM, HAIL, AIRCRAFT OR VEHICLES, VANDALISM, RIOT OR CIVIL COMMOTION, OR ACTS OF GOD.

The Seller shall not be liable for any loss or damage whatsoever resulting, directly or indirectly, from the use or loss of use of the product(s). Without limiting the foregoing, this exclusion from liability embraces a Purchaser's expenses for downtime or for making up downtime, lost profit, damages for which the Purchaser may be liable to other persons, damage to property, and injury to or death of any persons.

This limited warranty extends only to wholesale customers who buy directly through the Seller's normal distribution channels. The Seller does not warrant its products to end consumers. Consumers must inquire from their selling dealer as to the nature and extent of that dealer's warranty, if any.

THE LIMITED WARRANTY OFFERED HEREIN IS THE SOLE AND EXCLUSIVE REMEDY AVAILABLE TO THE PURCHASER. CORRECTION OF DEFECTS, IN THE MANNER AND FOR THE PERIOD OF TIME DESCRIBED HEREIN, SHALL CONSTITUTE THE COMPLETE FULFILLMENT OF ALL LIABILITIES OF SELLER TO THE PURCHASER WITH RESPECT TO THE COVERED PRODUCT, AND SHALL CONSTITUTE FULL SATISFACTION OF ALL CLAIMS, WHETHER BASED ON CONTRACT, NEGLIGENCE, STRICT LIABILITY OR OTHERWISE. IN NO EVENT SHALL SELLER BE LIABLE FOR ANY LOSS OF PROFITS OR ANY INDIRECT, CONSEQUENTIAL, INCIDENTAL, SPECIAL OR PUNITIVE DAMAGES ARISING OUT OF SELLER'S BREACH OF THIS LIMITED WARRANTY, OR ARISING OUT OF THE CUSTOMER'S INABILITY TO USE THE COVERED PRODUCT, EVEN IF SELLER HAS BEEN ADVISED OF THE POSSIBILITY OF SUCH DAMAGES.

Some states do not allow the exclusion or limitation of incidental or consequential damages, so the above limitation may not apply to a particular Purchaser. This Limited Warranty gives the Purchaser specific legal rights. The Purchaser may also have other rights, which vary from state to state.

400 - 532020 - Rev.D - US

© 2021, FAAC International, Inc. - All Rights Reserved
Published in Jan. 2021