SOLAR GATE CYCLES PER DAY REFERENCE GUIDE

LiftMaster Solar Gate Operators feature a best-in-class power management system that delivers power when needed most to operate the gate while minimizing power consumption at all other times. Power is provided to the gate operator via batteries. The batteries are charged from a solar panel(s) connected to the operator. The number of solar panels required is determined by whether the application is for a single or dual-gate, daily cycle rate, control board current consumption by feature and accessory, and region of the country.

Solar panel(s) must be located in an open area clear of obstructions and shading for the entire day. Snow, heavy fog or heavy rain affect solar panel performance and charge rate. Solar panels should be cleaned regularly to ensure proper operation. LiftMaster Gate Operators utilizing the solar option in cold weather climates where temperatures reach below -32°F (0°C) for more than 2 consecutive weeks require 33Ah batteries in lieu of standard 7Ah batteries. This is due to the effect of cold weather on batteries and a reduced number of hours of sunlight during the winter months. (see back page for details)

HCTDCUL

LA500PKGUL

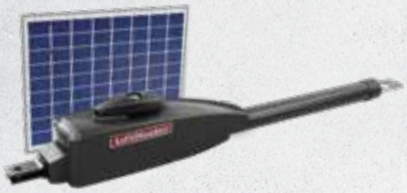

LA412PKGUL

LA400PKGUL

CSW24UL

CSL24UL

RSW12UL

RSL12UL

The map and daily cycle rate shown are approximations based upon the average solar radiation and the temperature effects on batteries in the given regions. Local geography and weather conditions may require additional solar panels. Solar optimized or wireless accessories are recommended in order to minimize power draw, as added accessories draw power and affect the daily cycle rate. For full details please reference the manual.

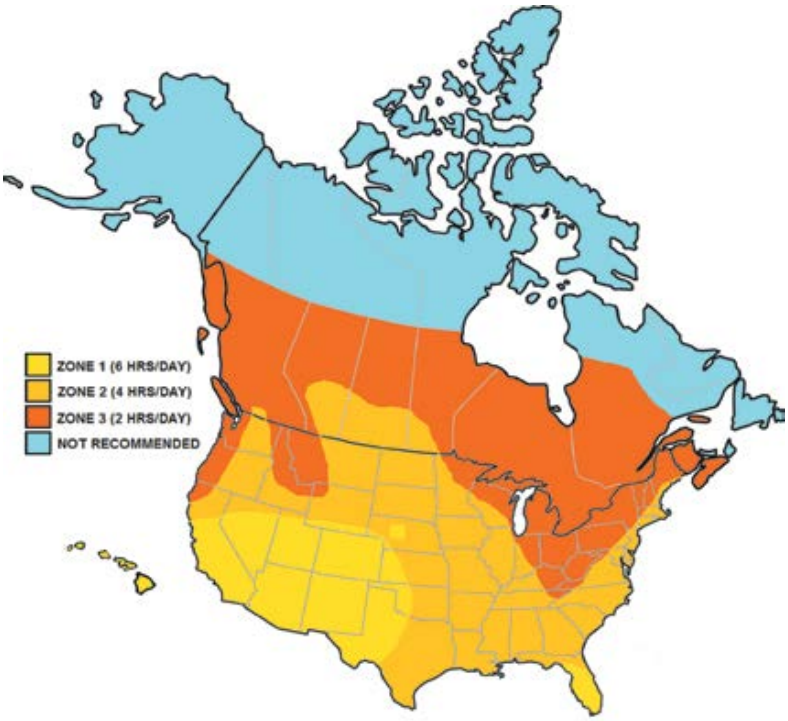

LiftMaster Solar Gate Operators are engineered to have low idle current draw including radio receiver to maximize battery life and solar performance. It is important to note, the following environmental factors can adversely affect battery performance in solar applications.

- Cold temperature (below 32°F (0°C))
- Snow cover on solar panel
- Reduced hours of sunlight in winter months

In geographic areas that experience cold temperatures below 32°F (0°C) for more than two weeks in addition to any of the factors listed above, the following steps can be taken to ensure best performance:

- Replace the standard 7Ah batteries with 33Ah batteries. (For linear actuators, use the optional XL control box model XLSOLARCONTUL)
- In states adjacent to Canada and Canadian provinces, increase the angle of the solar panels by an additional 15 degrees (60 degrees total). This will optimize the solar panels for the winter months and reduce the buildup of snow and ice on the panels.

Important note: Daily cycle rate and standby time will be reduced by at least 50% when temperatures reach extreme cold temperatures below -4°F (or -20°C) for periods of more than two weeks.

For best performance during the winter months, snow and ice should be removed from the solar panel, moving parts on the gate and gate operator. In addition all snow should be removed from the path of the gate to prevent nuisance reversals.

OPTIONAL POWER SUPPLY FOR COLD WEATHER APPLICATIONS	
Gate Operator	**Optional Power Supply**
LA500PKGUL, LA412PKGUL, LA400PKGUL	XLSOLARCONTUL (2) 33Ah batteries not included)
CSW24UL, CSL24UL	(2) 33Ah batteries recommended in lieu of standard 7Ah batteries
RSW12UL, RSL12UL	(1) 33Ah batteries recommended in lieu of standard 7Ah batteries

If heavy amounts of snow are expected over several days, the manual disconnect may be engaged and the gate left open to allow access and snow removal. Once the snow is removed, simply reengage the manual disconnect to resume normal operation.

LA500PKGUL / LA400PKGUL

Current consumption by control board feature 24V (LA500PKGUL, LA400PKGUL) configurations. Add up current draw by feature and accessory to determine total current draw.

Control Board Feature	Current Draw (mA)
Main board with no radios learned	2.7
One or more LiftMaster® remote controls learned	+1
MyQ® device or wireless dual-gate learned	+2.4
Expansion board	+11.1
Per loop detector LOOPDETLM (up to 3 loop detectors can be plugged in to the expansion board)	+3.8
Monitored Wireless Edge Kit (Model LMWEKITU receiver accepts up to (4) edge transmitters and each transmitter accepts up to (2) wired edges for a total system of (8) Monitored LiftMaster Edges, (1) receiver per gate operator.)	+5.8

Note: If the additional features on the expansion board are not used, it may be unplugged to conserve additional power draw (11mA)

LA500PKGUL		SINGLE GATE SOLAR CYCLES PER DAY						DUAL-GATE SOLAR CYCLES PER DAY					
	Total System Current Draw (mA)	Zone 1 (6 Hrs Sunlight/Day)		Zone 2 (4 Hrs Sunlight/Day)		Zone 3 (2 Hrs Sunlight/Day)		Zone 1 (6 Hrs Sunlight/Day)		Zone 2 (4 Hrs Sunlight/Day)		Zone 3 (2 Hrs Sunlight/Day)	
		7Ah batteries	33Ah batteries	7Ah batteries	33Ah batteries	7Ah batteries	33Ah batteries	7Ah batteries	33Ah batteries	7Ah batteries	33Ah batteries	7Ah batteries	33Ah batteries
10W* Solar Panel Note: Must use 24V Solar Panel	5	52	56	30	33	11	12	22	24	13	14		
	15	43	47	23	25			19	20		11		
	20	39	43	19	21			17	19				
	40	24	27					10	12				
	60	10	13										
20W Solar Panel Note: 20W would be (2) 10W 12V panels in series	5	113	132	67	79	27	32	48	57	29	34	12	14
	15	103	122	59	70	20	24	44	52	25	30		10
	20	98	117	54	65	16	21	42	50	23	28		
	50	71	88	30	40			30	38	13	17		
	100	29	45					13	19				
40W Solar Panel Note: 40W would be (2) 20W 12V panels or (4) 10W 12V panels in series	5	212	299	128	181	53	75	91	129	55	78	23	32
	15	201	288	118	170	44	66	86	124	51	73	19	29
	20	196	282	113	165	40	62	84	121	49	71	17	27
	100	114	194	41	86			49	83	18	37		
	200	27	93					11	40				
60W Solar Panel Note: 60W would be (6) 10W 12V panels or (2) 20W 12V & (2) 10W 12V in series	5	263	300	159	286	66	120	113	203	68	123	28	52
	15	252	300	149	275	57	111	108	197	64	118	25	48
	20	246	300	143	269	53	106	106	195	62	115	23	45
	100	160	300	67	181		35	69	153	29	78		15
	250	24	187		39			10	80		17		

LA400PKGUL		SINGLE GATE SOLAR CYCLES PER DAY						DUAL-GATE SOLAR CYCLES PER DAY					
	Total System Current Draw (mA)	Zone 1 (6 Hrs Sunlight/Day)		Zone 2 (4 Hrs Sunlight/Day)		Zone 3 (2 Hrs Sunlight/Day)		Zone 1 (6 Hrs Sunlight/Day)		Zone 2 (4 Hrs Sunlight/Day)		Zone 3 (2 Hrs Sunlight/Day)	
		7Ah batteries	33Ah batteries	7Ah batteries	33Ah batteries	7Ah batteries	33Ah batteries	7Ah batteries	33Ah batteries	7Ah batteries	33Ah batteries	7Ah batteries	33Ah batteries
10W* Solar Panel Note: Must use 24V Solar Panel	5	81	87	47	51	18	19	35	37	20	22		
	15	68	74	36	39			29	32	15	17		
	20	61	68	30	34			26	29	13	14		
	40	37	43		13			16	18				
	60	16	21										
20W Solar Panel Note: 20W would be (2) 10W 12V panels in series	5	100	100	100	100	42	50	76	89	45	53	18	21
	15	100	100	92	100	31	38	69	82	39	47	13	16
	20	100	100	85	100	25	33	66	79	36	44	11	14
	50	100	100	47	63			48	59	20	27		
	100	46	70					20	30				
40W Solar Panel Note: 40W would be (2) 20W 12V panels or (4) 10W 12V panels in series	5	100	100	100	100	83	100	100	100	86	100	35	51
	15	100	100	100	100	70	100	100	100	79	100	30	45
	20	100	100	100	100	63	97	100	100	76	100	27	42
	100	100	100	65	100			77	100	28	58		
	200	42	100		11			18	63				
60W Solar Panel Note: 60W would be (6) 10W 12V panels or (2) 20W 12V & (2) 10W 12V in series	5	100	100	100	100	100	100	100	100	100	100	44	81
	15	100	100	100	100	90	100	100	100	100	100	38	74
	20	100	100	100	100	83	100	100	100	96	100	36	71
	100	100	100	100	100		55	100	100	45	100		24
	250	37	100		61			16	100		26		

* Not currently offered in accessory line

** Numbers above for solar daily cycles are representative of wired dual-gate installation. If your installation is a wireless dual-gate setup use single gate cycle estimate and add in power draw for wireless dual-gate feature.

*** When installing LMRRUL/LMTBUL heater option refer to install manual for cycles and standby time.

WIRING

WIRE THE SOLAR PANELS - 12V APPLICATIONS

Models: LA412CONTU, LA412VDC, RSL12VDC, RSL12U, RSW12VDC, RSW12U

10W APPLICATION (IN PARALLEL)

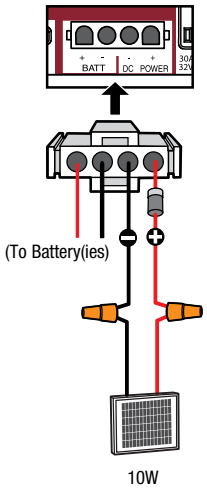

20W APPLICATION (IN PARALLEL)

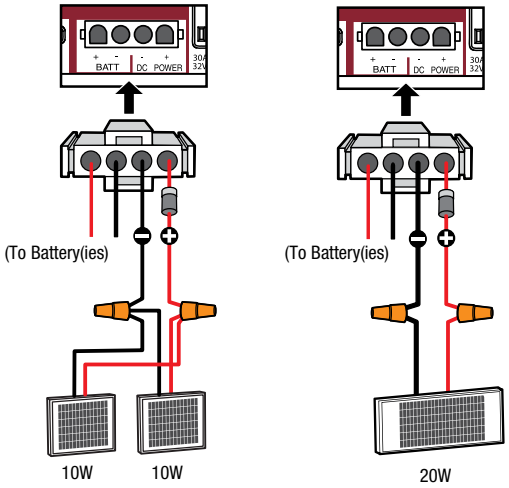

30W APPLICATION (IN PARALLEL)

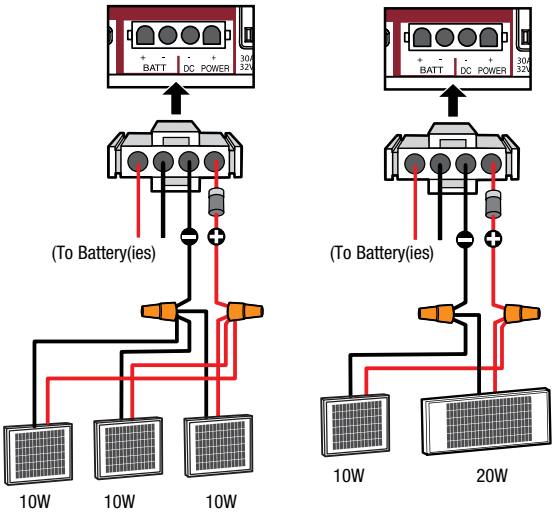

WIRE THE SOLAR PANELS - 24V APPLICATIONS

Models: LA400CONTU, LA400VDC, LA500CONTU, LA500VDC, LA500, CSL24VDC, CSL24U, CSW24VDC, CSW24U (for models CSL24V and CSW24V refer to the wiring instructions provided with the Solar Harness Kit [Model K94-36596]).

20W APPLICATION (IN SERIES)

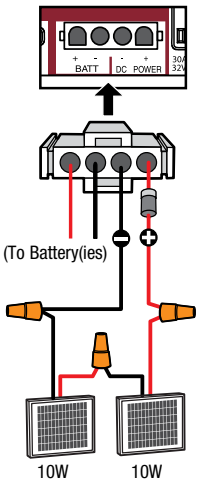

40W APPLICATION (IN SERIES)

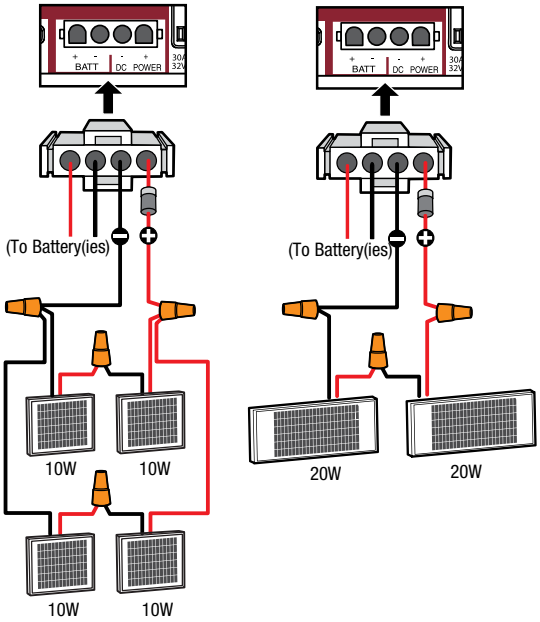

60W APPLICATION (IN SERIES)